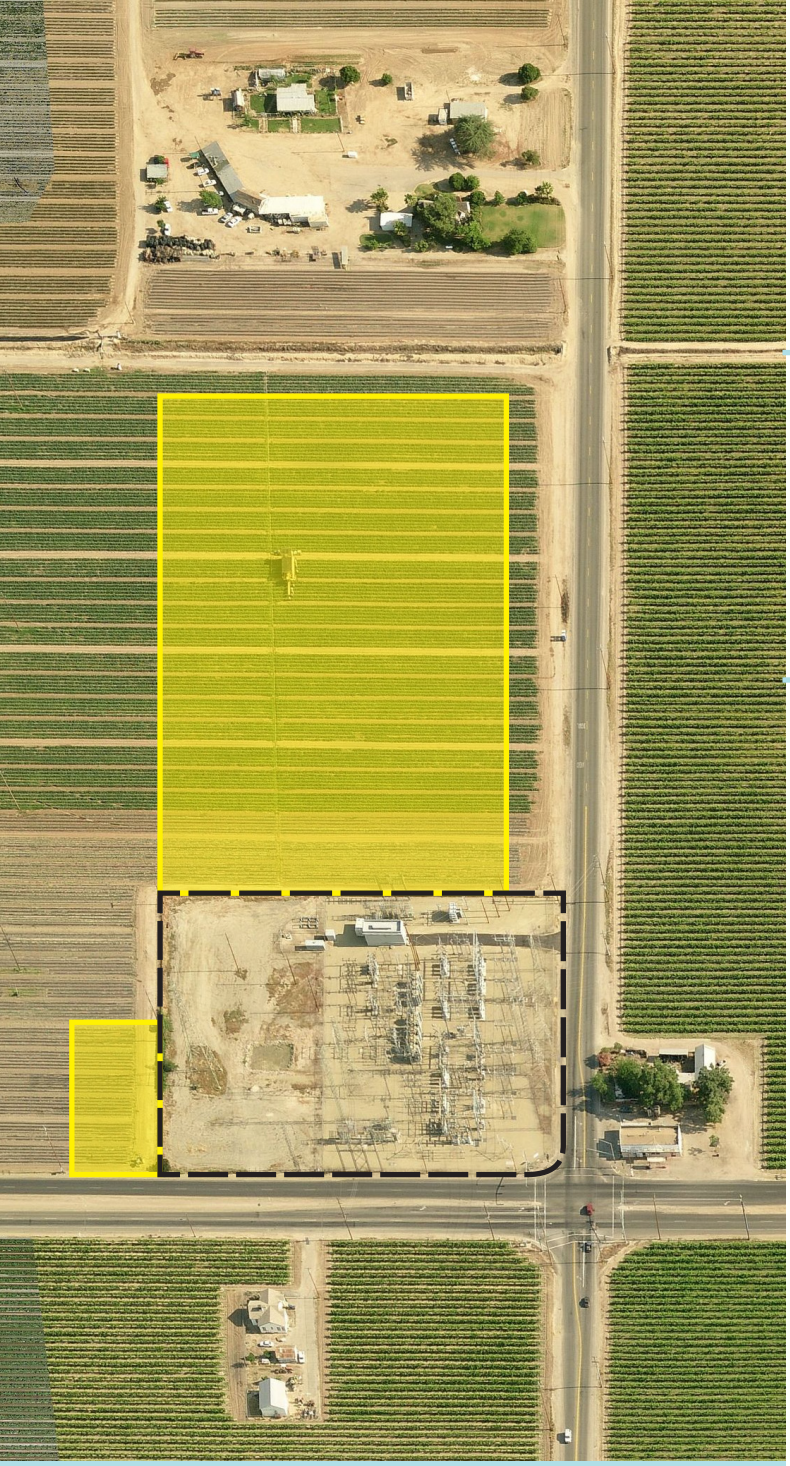

SANGER SUBSTATION EXPANSION PROJECT

DRAFT INITIAL STUDY/ MITIGATED NEGATIVE DECLARATION (IS/MND)

January 2017

A.15-09-012

PREPARED FOR:

STATE OF CALIFORNIA
PUBLIC UTILITIES
COMMISSION

PREPARED BY:

ecology and environment, inc.
Global Environmental Specialists

Table of Contents

1. Mitigated Negative Declaration 1-1
1.1 Project Information 1-1
1.2 Background and Description of Project 1-1
1.3 Required Approvals 1-3
1.4 Environmental Determination 1-3
1.5 Applicant Proposed Measures and Mitigation Measures 1-4

2. Environmental Determination 2-1
2.1 Environmental Factors Potentially Affected 2-1
2.2 Environmental Determination 2-1

3. Introduction to the Initial Study 3-1
3.1 Proposed Project Overview 3-1
3.2 Environmental Analysis 3-1
3.2.1 CEQA Process 3-1
3.2.2 CEQA Lead Agency 3-2
3.2.3 Initial Study 3-2

4. Project Description 4-1
4.1 Project Title 4-1
4.2 Lead Agency Name and Address 4-1
4.3 Lead Agency Contact Person and Phone Number 4-1
4.4 Project Location 4-1
4.5 Project Sponsor's Name and Address 4-1
4.6 General Plan Designation 4-1
4.7 Zoning 4-3
4.8 Surrounding Land Uses and Setting 4-3
4.9 Other Public Agencies Whose Approval is Required 4-3
4.10 Description of the Proposed Project 4-4
4.10.1 Overview 4-4
4.10.2 Project Objectives 4-4
4.10.3 Existing Substation and Transmission System 4-5
4.10.4 Project Components 4-7
4.10.5 Project Construction 4-13
4.10.6 Project Operation and Maintenance 4-21
4.10.7 Ground Disturbance 4-21
4.10.8 Right-of-Way Acquisition 4-22
4.11 Applicant Proposed Measures 4-22
4.12 Electric and Magnetic Fields Summary 4-28

5. Environmental Setting and Environmental Impacts 5.1-1

5.1 Aesthetics 5.1-1
5.1.1 Methodology 5.1-1
5.1.2 Environmental Setting 5.1-2
5.1.3 Regulatory Setting 5.1-14
5.1.4 Environmental Impacts and Assessment 5.1-15
5.2 Agriculture and Forest Resources 5.2-1
5.2.1 Environmental Setting 5.2-1
5.2.2 Regulatory Setting 5.2-2
5.2.3 Environmental Impacts and Assessment 5.2-3
5.3 Air Quality 5.3-1
5.3.1 Environmental Setting 5.3-1
5.3.2 Regulatory Setting 5.3-4
5.3.3 Environmental Impacts and Assessment 5.3-7
5.4 Biological Resources 5.4-1
5.4.1 Environmental and Regulatory Setting 5.4-1
5.4.2 Environmental Impacts and Assessment 5.4-10
5.5 Cultural Resources 5.5-1
5.5.1 Environmental Setting 5.5-2
5.5.2 Regulatory Setting 5.5-6
5.5.3 Environmental Impacts and Assessment 5.5-8
5.6 Geology and Soils 5.6-1
5.6.1 Environmental Setting 5.6-1
5.6.2 Regulatory Setting 5.6-4
5.6.3 Environmental Impacts and Assessment 5.6-5
5.7 Greenhouse Gases 5.7-1
5.7.1 Environmental Setting 5.7-1
5.7.2 Regulatory Setting 5.7-2
5.7.3 Environmental Impacts and Assessment 5.7-5
5.8 Hazards and Hazardous Materials 5.8-1
5.8.1 Environmental Setting 5.8-1
5.8.2 Regulatory Setting 5.8-2
5.8.3 Environmental Impacts and Assessment 5.8-7
5.9 Hydrology and Water Quality 5.9-1
5.9.1 Environmental Setting 5.9-1
5.9.2 Regulatory Setting 5.9-3
5.9.3 Environmental Impacts and Assessment 5.9-4
5.10 Land Use and Planning 5.10-1
5.10.1 Environmental Setting 5.10-1
5.10.2 Regulatory Setting 5.10-1
5.10.3 Environmental Impacts and Assessment 5.10-4
5.11 Mineral Resources 5.11-1
5.11.1 Environmental Setting 5.11-1
5.11.2 Regulatory Setting 5.11-1
5.11.3 Environmental Impacts and Assessment 5.11-2
5.12 Noise 5.12-1

5.12.1 Environmental Setting 5.12-1
5.12.2 Regulatory Setting 5.12-3
5.12.3 Environmental Impacts and Assessment 5.12-6
5.13 Population and Housing 5.13-1
5.13.1 Environmental Setting 5.13-1
5.13.2 Regulatory Setting 5.13-1
5.13.3 Environmental Impacts and Assessment 5.13-2
5.14 Public Services 5.14-1
5.14.1 Environmental Setting 5.14-1
5.14.2 Regulatory Setting 5.14-2
5.14.3 Environmental Impacts and Assessment 5.14-2
5.15 Recreation 5.15-1
5.15.1 Environmental Setting 5.15-1
5.15.2 Regulatory Setting 5.15-1
5.15.3 Environmental Impacts and Assessment 5.15-2
5.16 Transportation and Traffic 5.16-1
5.16.1 Environmental Setting 5.16-1
5.16.2 Regulatory Setting 5.16-5
5.16.3 Environmental Impacts and Assessment 5.16-6
5.17 Utilities and Service Systems 5.17-1
5.17.1 Environmental Setting 5.17-1
5.17.2 Regulatory Setting 5.17-3
5.17.3 Environmental Impacts and Assessment 5.17-4
5.18 Mandatory Findings of Significance 5.18-1
5.18.1 Environmental Impacts and Assessment 5.18-1

6. Environmental Setting and Environmental Impacts 6-1
6.1 Minor Project Refinements 6-21
6.2 Dispute Resolution 6-21
6.3 Final Mitigation Monitoring and Reporting Plan 6-22

Appendices

Appendix A List of Preparers
Appendix B References
Appendix C Air Quality and Greenhouse Gas Emissions Calculations
Appendix D Cultural Resources Consultation Documentation

This page intentionally left blank.

Tables

Table 1-1 Potential Permits and Approvals 1-3
Table 4-1 Potential Permits and Approvals 4-3
Table 4-2 Construction Equipment Used for the Proposed Project by Phase 4-19
Table 4-3 Proposed Project Schedule by Phase 4-20
Table 4-4 Conventional Method Land Disturbance Estimates 4-21
Table 4-5 Applicant Proposed Measures 4-22
Table 5.1-1 Key Viewpoint Descriptions and Aesthetic Qualities 5.1-12
Table 5.1-2 Aesthetics Checklist 5.1-16
Table 5.2-1 FMMP Farmland in Fresno County 5.2-2
Table 5.2-2 Agriculture and Forest Resources Checklist 5.2-4
Table 5.2-3 Farmland in the Sanger Project Area 5.2-5
Table 5.3-1 Attainment Status for the San Joaquin Valley Air Pollution Control District 5.3-2
Table 5.3-2 Ambient Air Quality in Fresno County and San Joaquin Valley Air Basin – California Ambient Air Quality Standards 5.3-3
Table 5.3-3 National and California Ambient Air Quality Standards 5.3-4
Table 5.3-4 Air Quality Checklist 5.3-8
Table 5.3-5 Estimated Unmitigated Criteria Pollutant Emissions during Construction 5.3-9
Table 5.4-1 Approximate Extent of Vegetation and Other Land Cover Types within the Survey Area 5.4-6
Table 5.4-2 Special Status Wildlife Species with Potential to Occur within Project Area 5.4-8
Table 5.4-3 Biological Resources Checklist 5.4-12
Table 5.5-1 Summary of Native American Consultation 5.5-6
Table 5.5-2 Cultural Resources Checklist 5.5-10
Table 5.6-1 Soil Types and Characteristics 5.6-3
Table 5.6-2 Geology and Soils Checklist 5.6-6
Table 5.7-1 Greenhouse Gases Global Warming Potentials 5.7-1
Table 5.7-2 Greenhouse Gases Checklist 5.7-6
Table 5.7-3 Estimated Construction Unmitigated Greenhouse Gas Emissions 5.7-7
Table 5.7-4 Operation and Maintenance Unmitigated GHG Emissions 5.7-7
Table 5.7-5 Overall Unmitigated Greenhouse Gas Emissions of the Proposed Project 5.7-8
Table 5.7-6 Overall Greenhouse Gas Emissions of the Proposed Project with APM GHG-1 and APM GHG-2 ..... 5.7-8
Table 5.7-7 Project Conformity with Plans, Policies, and Regulations 5.7-9
Table 5.8-1 Hazards and Hazardous Materials Checklist 5.8-8
Table 5.9-1 Hydrology and Water Quality Checklist 5.9-5
Table 5.10-1 Land Use and Planning Checklist 5.10-4
Table 5.10-2 Sanger Substation Expansion Project Conformity with Plans, Policies, and Regulations Related to Land Use and Planning 5.10-5

Table 5.11-1 Mineral Resources Checklist 5.11-2
Table 5.12-1 Definition of Acoustical Terms 5.12-1
Table 5.12-2 Sensitive Receptors within 1,000 Feet of the Proposed Project Area..... 5.12-3
Table 5.12-3 Land Use Compatibility for Community Noise Environments 5.12-5
Table 5.12-4 Fresno County Exterior Noise Standards..... 5.12-6
Table 5.12-5 Noise Checklist 5.12-7
Table 5.12-6 Vibration Levels from Typical Construction Equipment 5.12-10
Table 5.12-7 Estimated Combined Construction Noise Exposure at Sensitive Receptors..... 5.12-12
Table 5.13-1 Existing Conditions for Population and Housing 5.13-1
Table 5.13-2 Population and Housing Checklist..... 5.13-2
Table 5.14-1 Public Services Checklist..... 5.14-2
Table 5.15-1 Recreation Checklist 5.15-2
Table 5.16-1 State Routes and Local Roadways Impacted by Project-Related Traffic 5.16-1
Table 5.16-2 Level of Service Criteria..... 5.16-3
Table 5.16-3 Generalized Daily Traffic Volumes for Level of Service..... 5.16-3
Table 5.16-4 Existing Average Daily Traffic and Level of Service on State Routes and Local Roadways Impacted by Project-Related Traffic (2015) 5.16-4
Table 5.16-5 Relevant Transportation Policies and Ordinances 5.16-5
Table 5.16-6 Transportation and Traffic Checklist 5.16-7
Table 5.16-7 Peak Daily Construction Trips..... 5.16-9
Table 5.16-8 Peak Average Daily Traffic and Level of Service Operation During Construction..... 5.16-9
Table 5.17-1 Landfills Serving the Project Area..... 5.17-2
Table 5.17-2 Utilities and Service Systems Checklist 5.17-4
Table 5.18-1 Mandatory Findings of Significance Criteria 5.18-1
Table 5.18-2 Cumulative Project List 5.18-4
Table 6-1 Draft Mitigation Monitoring and Reporting Plan 6-3

Figures

Figure 4-1 Project Location 4-2
Figure 4-2 Transmission System Schematic 4-6
Figure 4-3 Existing and Proposed Infrastructure 4-8
Figure 4-4 Substation Layout 4-9
Figure 4-5 Diagram of Typical Microwave Tower 4-12
Figure 4-6 Diagram of Typical TSPs 4-14
Figure 5.1-1 Viewpoints and Visual Simulation Locations 5.1-4
Figure 5.1-2a Viewpoints 1 and 2 ..... 5.1-5
Figure 5.1-2b Viewpoints 3 and 4 ..... 5.1-6
Figure 5.1-2c Viewpoints 5 and 6 ..... 5.1-7
Figure 5.1-2d Viewpoints 7 and 8 ..... 5.1-8
Figure 5.1-2e Viewpoints 9 and 10 ..... 5.1-9
Figure 5.1-2f Viewpoints 11 and 12 ..... 5.1-10
Figure 5.1-2g Viewpoints 13 and 14 ..... 5.1-11
Figure 5.1-3a Key Viewpoint 1 (Visual Simulation): View from South McCall Avenue at East Jensen Avenue Looking Northwest 5.1-23
Figure 5.1-3b Key Viewpoint 2 (Visual Simulation): View from South McCall Avenue Near Closest Residence 5.1-25
Figure 5.1-3c Key Viewpoint 6 (Visual Simulation): View from East Jensen Avenue Looking Northeast 5.1-27
Figure 5.1-3d Key Viewpoint 7 (Visual Simulation): View from East Jensen Avenue Looking Northwest 5.1-29
Figure 5.2-1 FMMP and Williamson Act Land 5.2-7
Figure 5.4-1 Vegetation and Land Cover Types 5.4-3
Figure 5.6-1 Faults and Earthquake Epicenters within the Vicinity of the Project 5.6-2
Figure 5.9-1 Surface Water Features and Water Well Locations 5.9-2
Figure 5.12-1 Sensitive Receptors 5.12-4
Figure 5.18-1 Locations of Cumulative Projects 5.18-6

This page intentionally left blank.

Acronyms and Abbreviations

AB	Assembly Bill
ACM	asbestos-containing material
AD	anno domini
ADT	average daily traffic
AE	Exclusive Agricultural
AE-20	Exclusive Agricultural District, 20-acre minimum lot size
APLIC	Avian Power Line Interaction Committee
APM	applicant proposed measure
applicant	Pacific Gas and Electric Company; *also* PG&E
BAAH	breaker-and-a-half
BAU	business-as-usual
bgs	below ground surface
BMP	best management practice
BP	before present
BPS	Best Performance Standards
CAA	Clean Air Act
CAAQS	California Ambient Air Quality Standards
CAL FIRE	California Department of Forestry and Fire Protection
CalOSHA	California Occupational Health and Safety Administration
CalRecycle	California Department of Resources Recycling and Recovery
Caltrans	California Department of Transportation
CARB	California Air Resources Board
CBC	California Building Standards Code
CCAA	California Clean Air Act
CCAP	Climate Change Action Plan
CCR	California Code of Regulations
CDFW	California Department of Fish and Wildlife
CEQA	California Environmental Quality Act
CESA	California Endangered Species Act
CFGC	California Fish and Game Code
CFR	Code of Federal Regulations
CGS	California Geological Survey
CH_4	methane
CNDDB	California Natural Diversity Database
CNEL	community noise equivalent level
CNPS	California Native Plant Society
CO	carbon monoxide
CO_2	carbon dioxide
CO_2e	carbon dioxide equivalent
CPUC	California Public Utilities Commission
CRHR	California Register of Historical Resources
CRMTP	Cultural Resources Monitoring and Treatment Plan

CRS	Cultural Resources Specialist
CUPA	Certified Unified Program Agency
CWA	Clean Water Act
dB	decibels
dBA	A-weighted decibels
DNL	day-night average sound level; *also* L_{dn}
DTSC	California Department of Toxic Substance Control
EDR	Environmental Data Resources, Inc.
EMF	electromagnetic field
EPA	United States Environmental Protection Agency
ESA	Federal Endangered Species Act
FAA	Federal Aviation Administration
FCFPD	Fresno County Fire Protection District
FCSD	Fresno County Sheriff's Department
FEMA	Federal Emergency Management Agency
FFS	free flow speed
FHWA	Federal Highway Administration
FMMP	Farmland Mapping and Monitoring Program
FP	fully protected species
g	g-force
GHG	greenhouse gas
GIS	geographic information system
GWP	global warming potential
H_2S	hydrogen sulfide
HAP	hazardous air pollutant
HCP	Habitat Conservation Plan
HFC	hydrofluorocarbon
HMBP	Hazardous Materials Business Plan
HSC	California Health and Safety Code
IPaC	Information for Planning and Conservation
IS/MND	Initial Study/Mitigated Negative Declaration
KV	key viewpoint
kV	kilovolt
L_{dn}	day-night average sound level; *also* DNL
LDSP	light duty steel pole
LED	light-emitting diode
L_{eq}	equivalent sound pressure level
Lmax	maximum noise level
LOS	Level of Service
LRA	Local Responsibility Area
LSAA	Lake or Streambed Alteration Agreement
LST	lattice steel tower
MBTA	Migratory Bird Treaty Act
MM	Mitigation Measure
MMRP	Mitigation Monitoring and Reporting Plan
MPAC	Modular Protection Automation Control

MPC	Minor Project Change
mph	miles per hour
MPR	Minor Project Refinement
MRZ	Mineral Resource Zone
$MTCO_2e$	metric tons of carbon dioxide equivalent
MVA	megavolt amperes
N_2O	nitrous oxide
NAAQS	National Ambient Air Quality Standards
NAHC	California Native American Heritage Commission
NEMA	National Electrical Manufacturer's Association
NESHAP	National Emission Standards for Hazardous Air Pollutants
NO_2	nitrogen dioxide
NPDES	National Pollution Discharge Elimination System
NSR	North State Resources
O&M	operations and maintenance
O_3	ozone
OSHA	Occupational Health and Safety Administration
Pb	lead
P-C	Production-Consumption
PCB	polychlorinated biphenyls
PEA	Proponent's Environmental Assessment
PFC	perfluorocarbon
PFM	Petition for Modification
PG&E	Pacific Gas and Electric Company; *also*, the applicant
PM_{10}	particulate matter less than 10 microns in diameter
$PM_{2.5}$	particulate matter less than 2.5 microns in diameter
PRC	Public Resources Code
PRMMP	Paleontological Resources Monitoring and Mitigation Plan
proposed project	Sanger Substation Expansion Project
PSD	Prevention of Significant Deterioration
PSHA	Probabilistic Seismic Hazard Assessment
RCRA	Resource Conservation and Recovery Act
REL	Reference Exposure Levels
ROW	right-of-way
RPS	Renewables Portfolio Standard
SB X1-2	Senate Bill 2 of the First Extraordinary Session
SCAQMD	South Coast Air Quality Management District
SF_6	sulfur hexafluoride
SIP	state implementation plan
SJVAB	San Joaquin Valley Air Basin
SJVAPCD	San Joaquin Valley Air Pollution Control District
SO_2	sulfur dioxide
SO_4	sulfate
SPCC	Spill Prevention, Control, and Countermeasure
SR	State Route
SSC	species of special concern

SSJVIC	Southern San Joaquin Valley Information Center
SWPPP	Stormwater Pollution Prevention Plan
SWRCB	State Water Resources Control Board
TAC	toxic air contaminant
TCR	Tribal Cultural Resource
TSP	tubular steel pole
USACE	U.S. Army Corps of Engineers
USFWS	U.S. Fish and Wildlife Service
USGS	United States Geological Survey
VdB	vibration decibels
VOC	volatile organic compounds
WDR	Waste Discharge Requirement
WEAP	Worker Environmental Awareness Plan

PUBLIC UTILITIES COMMISSION
505 VAN NESS AVENUE
SAN FRANCISCO, CALIFORNIA 94102-3298

Draft Mitigated Negative Declaration

Pacific Gas & Electric Company's Sanger Substation Expansion Project Application No. A 15-09-012

Lead Agency: California Public Utilities Commission (CPUC)
Energy Division
505 Van Ness Avenue, 4th Floor
San Francisco, California 94102

Contact: Billie Blanchard, Project Manager
(415) 703-2068 or billie.blanchard@cpuc.ca.gov

1. Mitigated Negative Declaration

1.1 Project Information

Project: Sanger Substation Expansion Project
Unincorporated Fresno County, California

Proponent: Pacific Gas and Electric Company (PG&E)
77 Beale Street
San Francisco, California 94105
(800) 743-5000

1.2 Background and Description of Project

Pursuant to California Public Utilities Commission's (CPUC) General Order 131-D, Pacific Gas & Electric Company (PG&E) has filed an application (A.15-09-012) with the CPUC for a Permit to Construct the Sanger Substation Expansion Project (proposed project). The application was filed on September 30, 2015, and includes the Proponent's Environmental Assessment (PEA) prepared by PG&E pursuant to the CPUC's Rules of Practice and Procedure Rule 2.4 (CEQA Compliance). The proposed project includes the expansion of the existing Sanger Substation in unincorporated Fresno County,

California, to contain a new breaker-and-a-half bus configuration. The proposed expansion consists of the following components:

- **Substation Expansion:** PG&E would install equipment including circuit breakers, switches/disconnects, steel support structures for disconnect switches, bus supports and Capacitor Coupling Voltage Transformer equipment, two Modular Protection Automation Control (MPAC) buildings, and a microwave tower for communications. PG&E would also elevate the existing transfer bus and make alterations to interconnect reconfigured power lines.
- **Substation Equipment Removal:** PG&E would remove obsolete circuit breakers, switches, steel support structures, and the concrete control building at the existing substation.
- **Power Line Reconfiguration:** PG&E would rearrange existing power lines leading to the substation by removing existing lattice steel towers (LSTs) and wood poles and installing tubular steel poles (TSPs) in a different alignment. Existing power lines would be relocated to change their angle.
- **Existing Substation Changes:** On transformer bank 1, PG&E would remove wood poles that support a temporary line from the dead end structure and would replace them with a new TSP to terminate the new 115kV line for bank 1. On transformer bank 3, PG&E would relocate the existing dead end structure to terminate at the new 115kV line for bank 3 using new TSPs.
- **Telecommunications Receiver:** PG&E would install two antenna dishes on an existing microwave tower at the Fence Meadow Repeater Station.

The proposed project would be located in the San Joaquin Valley in Fresno County near the cities of Sanger and Fresno. PG&E has stated that the project is necessary to increase reliability of the transmission system in Fresno County. Construction would begin as early as fall of 2017, depending on CPUC approval. In accordance with the CPUC's General Order 131-D, approval of this project must comply with the California Environmental Quality Act (CEQA).

The CPUC has prepared this Initial Study (IS) pursuant to CEQA for the proposed project to determine if any significant adverse effects on the environment would result from project implementation. The IS utilizes the significance criteria outlined in Appendix G of the CEQA Guidelines. If the IS for the project indicates that a significant adverse impact that could not be mitigated to a less than significant level could occur, the CPUC would be required to prepare an Environmental Impact Report.

According to Article 6 (Negative Declaration Process) and Section 15070 (Decision to Prepare a Negative Declaration or Mitigated Negative Declaration) of the CEQA Guidelines, a public agency shall prepare or have prepared a proposed Negative Declaration or Mitigated Negative Declaration (MND) for a project subject to CEQA when:

(a) The initial study shows that there is no substantial evidence, in light of the whole record before the agency, that the project may have a significant effect on the environment, or

(b) The initial study identifies potentially significant effects, but:

(1) Revisions in the project plans or proposals made by, or agreed to by the applicant before a proposed mitigated negative declaration and initial study are released for public review would avoid the effects or mitigate the effects to a point where clearly no significant effects would occur, and

(2) There is no substantial evidence, in light of the whole record before the agency, that the project as revised may have a significant effect on the environment.

Based on the analysis in the Initial Study, it has been determined that all project-related environmental impacts would be reduced to a less than significant level with the incorporation of feasible mitigation measures. Therefore, adoption of an MND will satisfy the requirements of CEQA. The mitigation measures included in this MND are designed to reduce or eliminate the potentially significant environmental impacts described in the IS. The analysis in the IS explains when a measure described in this document has been previously incorporated into the project, either as a specific project design feature or as an applicant proposed measure (APM). Mitigation measures are structured in accordance with the criteria in Section 15370 of the CEQA Guidelines.

1.3 Required Approvals

PG&E would obtain permits for the project, as needed, from state and local agencies. Table 1-1 lists permits and approvals that may be required for project construction.

Table 1-1 Potential Permits and Approvals

Permit/Approval	Agency	Requirement
National Pollutant Discharge Elimination System (General Construction Storm water Permit)	State Water Resources Control Board	PG&E would disturb more than 1 acre of land during proposed project construction.
Roadway Encroachment Permit	Fresno County	PG&E would conduct work within Fresno County roadways (East Jensen Avenue and South McCall Avenue) and construct two new driveways off South McCall Avenue for substation access.
Building Permit	Fresno County	PG&E would construct two Modular Protection Automation Control buildings and a 9-foot-tall security fence.
Dust Control Plan	San Joaquin Valley Air Pollution Control District	PG&E would disturb more than 5 acres during proposed project construction.
Informal Notification	United States Forest Service, Sierra National Forest	PG&E would install an antenna system at the Fence Meadow Repeater Station.

Key:
PG&E Pacific Gas and Electric Company

1.4 Environmental Determination

Pursuant to the Public Resource Code and CEQA Guidelines, the Lead Agency (CPUC) has prepared an IS for the proposed project to evaluate the project's potential effects on the environment and to evaluate the level of significance of these effects. The IS relies on information in PG&E's PEA filed on September 30, 2015; PG&E's responses to data requests; project site reconnaissance by the CPUC environmental team in February 2016; the CPUC's independent analysis; and other environmental analyses.

Based on the IS, it is determined that the proposed project would not have a significant effect on the environment with the incorporation of the proposed APMs, and mitigation measures. The IS is available for review at the CPUC, 505 Van Ness Avenue, San Francisco, California, 94102 and at:

- Fresno County Library, Sanger Branch, at 1812 7th Street, Sanger, California, 93657; and

- Fresno County Library, Fresno Branch, at 2420 Mariposa Street, Fresno, California, 93721.

1.5 Applicant Proposed Measures and Mitigation Measures

PG&E's PEA identifies measures to address potentially significant impacts—the APMs—and these APMs are considered to be part of the description of the proposed project and are listed in Table 4-5, "Applicant Proposed Measures," in the IS. Based on the IS analysis, additional mitigation measures are identified for adoption to ensure that impacts of the proposed project would be less than significant. The additional mitigation measures supplement or supersede the APMs. PG&E has agreed to implement all of the additional recommended mitigation measures as part of the proposed project.

Section 6 of this document includes a Mitigation Monitoring and Reporting Plan that has been prepared to ensure that the APMs and mitigation measures presented below are properly implemented. The plan describes specific actions required to implement each APM and mitigation measure, including information on timing of implementation and monitoring requirements. Following project approval, the CPUC would prepare and implement a Mitigation Monitoring Compliance and Reporting Program to ensure compliance with mitigation measures approved in the Final IS/MND.

Implementation of the following mitigation measures would avoid potentially significant impacts identified in the IS or reduce them to less than significant levels.

Aesthetics

MM AES-1 (supplements APM AES-2): Lighting utilized for night-time construction and for security during construction shall be shielded and oriented away from sensitive receptors.

MM AES-2 (supplements APM AES-3): All conductor used for the proposed project shall be non-specular.

Agriculture and Forest Resources

MM AGR-1: Farmland Construction Impact Mitigation (supplements APM AGR-1). PG&E shall implement the following measures for temporarily disturbed Farmland:

- The applicant shall survey agricultural fields prior to construction and return all temporary disturbance areas to pre-construction conditions (i.e, meeting the definition of Prime Farmland, Unique Farmland, or Farmland of Statewide Importance, as shown on the maps prepared pursuant to the Farmland Mapping and Monitoring Program of the California Resources Agency) after the completion of construction, except that crops will not be replanted.
- If topsoil is removed from an area to accommodate temporary construction activities, it shall be restored to preconstruction conditions within two months of the completion of construction, except that crops will not be replanted by PG&E.

Biological Resources

MM BIO-1: Biological Resources Worker Environmental Awareness Program. The applicant shall develop a Worker Environmental Awareness Program (WEAP). Prior to the start of construction, all construction crew members and contractors shall be required to attend the WEAP training presented by a CPUC-approved, qualified biologist. All construction crew members and contractors who attend the training shall sign a form indicating that they attended the training and understood the information.

Follow-up training shall be conducted as needed; new workers shall attend WEAP training prior to beginning at the work site. A record of all trained personnel shall be kept on site, and a sticker indicating training completion shall be worn on all worker hard hats.

The WEAP training shall include a review of the special status species and other sensitive resources (e.g., nesting birds) that could exist in the project area, the locations where sensitive biological resources do or may occur, the limits of the work area, applicable laws and regulations, penalties for non-compliance, and APMs and mitigation measures to be implemented for avoidance of these sensitive resources. Additionally, personnel shall be trained for situations where it is necessary to contact a qualified biologist (e.g., should any sensitive biological resources such as an active nest be found during construction). If sensitive resources are found, the qualified biologist shall provide guidelines for the personnel to avoid impacts on them. All WEAP participants shall receive a brochure that outlines all this information including contact information for the appropriate environmental personnel.

MM BIO-2: Pre-activity surveys for sensitive species. A CPUC-approved qualified biologist shall conduct a pre-activity survey for all activities occurring near where sensitive resources may be found within 7 days prior to work commencing. If there is no work in an area for 7 days, it shall be considered a new work area if construction begins again. The biologist shall survey all suitable habitat for sensitive species within 100 feet of the activities (see MM BIO-4, MM BIO-6, or MM BIO-7 for additional nesting bird procedures). If any species listed by the state or federal endangered species acts or protected by other statutes, or their signs, are found, the CPUC and the appropriate wildlife agencies shall be notified within 48 hours to confirm appropriate avoidance measures. If it is determined that construction activity cannot avoid areas where sensitive biological resources are present, the qualified biologist shall coordinate with the CPUC, CDFW, and/or USFWS, as necessary.

If a potential San Joaquin kit fox den is found then a minimum buffer of 50 feet shall be implemented. For a known den, the buffer shall be 100 feet and for a natal den the avoidance buffer shall be determined on a case-by-case basis in coordination with CDFW and USFWS. If dens cannot be avoided by these distances, a CPUC-qualified biologist shall determine occupation following the procedures outlined in USFWS Standardized Recommendations for Protection of the Endangered San Joaquin Kit Fox Prior to and During Ground Disturbance (USFWS 2011) and consult and coordinate with CDFW and USFWS.

MM BIO-3: Biological Monitoring. A CPUC-approved qualified biological monitor shall develop an appropriate schedule of monitoring to ensure that disturbance is minimized to sensitive resources to the greatest extent possible during project activities. The schedule shall ensure that a CPUC-approved qualified biological monitor (1.) visits the project area regularly (at a minimum of every 7 days); (2.) is present to monitor all ground disturbing activities, such as grading and trenching; and (3.) is present to monitor any observed special status species (observed sign or individual) that may be disturbed by project activities. Biological monitors shall be familiar with San Joaquin kit fox and burrowing owl. Avian biologists present during nesting bird season may act as the biological monitor if qualified.

The biological monitor shall be responsible for ensuring that impacts on special status species, their associated habitat, and/or sensitive resources are avoided to the fullest extent possible, and the monitor shall have full authority to halt construction if the monitor observes actual or potential disturbances to sensitive resources. At a minimum of once per 7 days, the monitor shall survey all project components near where construction activities may occur in the next 7 days, as well as the irrigation ditch area. Where appropriate, monitors shall flag the boundaries of areas where activities need to be restricted to protect special status species. If a special status species is present in the project area while construction activities are occurring, the restricted areas shall be monitored to ensure their protection during construction.

MM BIO-4: Mitigation for nesting birds (Supersedes APM BIO-14). The applicant shall implement the measures below in all work areas where any construction-related activities are conducted during the nesting bird season (February 1 to September 15) for all species except Swainson's hawk and white-tailed kite (see MM BIO-7), and burrowing owl (see MM BIO-6).

Nesting Bird Survey Requirements. If work is scheduled to occur during nesting bird season, then the following provisions shall be employed:

- A CPUC-approved qualified avian biologist shall conduct surveys for nesting birds within 7 days prior to the start of any construction-related activities. Areas shall be re-surveyed every 7 days while construction activities are occurring. If there is no work in an area for 7 days, it shall be considered a new work area if construction resumes. In addition, a CPUC-approved qualified monitor shall conduct pre-construction clearance sweeps for nesting birds at all access, staging and, work areas where suitable habitat is present within approximately 24 hours of construction activities each day during the nesting season.
- Surveys shall be conducted with the appropriate buffer, duration, level of effort, and timing based on level of construction disturbance, time of day, and environmental factors. Surveys shall be conducted within a 500 foot buffer of active work areas for raptors and a 250 foot buffer for non-raptors, at a minimum.
- Surveys shall be conducted at a minimum between February 1 and September 15; however, the survey season may need to begin earlier or end later depending on species and weather conditions.
- Survey results shall be provided to the CPUC each week.

Avoid Impacts on Nesting Birds.

- When a nest of any avian or raptor species is located within 500 feet of a construction site, a CPUC-approved qualified avian biologist shall determine whether the nest is active. A nest shall be defined as active once a bird begins nest construction or when a raptor begins "nest decoration." An inactive nest is defined as a nest that has been abandoned by the adult bird or once fledglings are no longer dependent on the nest site or parental care.
- If the nest is active, then the qualified biologist shall implement an exclusionary buffer to prevent construction activities from occurring within a specified distance from the active nest. For active raptor nests located more than 500 feet from the nearest work site, and non-raptor active nests located more than 250 feet from the nearest work site, no additional measures shall be implemented. A minimum standard buffer of 500 feet for an active raptor nest or 250 feet for an active non-raptor nest, as recommended by CDFW (Bahm pers. comm. 2016), shall be implemented when construction activities are occurring. Buffers shall not apply to construction-related traffic using existing roads that are not limited to project-specific use (i.e., county roads, highways, etc.).
- If any active nest of a species listed by the state or federal endangered species acts or fully protected species (other than those specified MM BIO-7) is found, then the minimum standard buffer shall be implemented and the CPUC and the appropriate wildlife agencies shall be notified immediately (within 48 hours).
- As appropriate, nest deterrent strategies may be used to prevent birds from nesting in construction equipment or staged materials. This includes covering equipment with tarps or covering small holes. Bird netting may not be used due to risk of entanglement.

- If construction requires removal of a structure or tree that contains a known or historic nest, then removal of that structure must occur when the nest is determined to be inactive and, if feasible, outside of nesting season.
- PG&E shall adhere to recommendations published by APLIC's Reducing Avian Collisions with Power Lines: The State of the Art in 2012 (APLIC 2012), as feasible.

Monitoring and Reporting. Nest locations and exclusion buffers shall be mapped (using a geographic information system [GIS]) for all identified nests. The information shall be maintained in a database; shall be provided to the CPUC weekly and to USFWS and CDFW monthly; and shall include the following information:

- Date, time, and length of observation period
- Status (active or inactive)
- Species
- Nest location, including nest height
- Behavioral observations
- Site conditions, including construction activities
- Nest exposure
- Estimated date of nest establishment
- Estimated fledge date
- Number of eggs or hatchlings, if observed
- Buffer size implemented

Nests protected by a standard buffer shall be observed by a CPUC-approved qualified avian biologist at a frequency and length of time the avian biologist deems necessary to ensure activities are not causing disturbance to the nest (minimum of once a week during construction) until the biologist has determined that the nest is inactive or until after construction ends in the work area (whichever occurs first). If the biologist observes the birds becoming agitated or the incubating adult leaves the nest as a result of construction activities, he or she shall have the authority to halt work and expand the buffer. No avian reporting shall be required for construction outside of the nesting season unless species are observed nesting outside of the normal season or special status bird species are observed in the project area.

Buffer Reductions. The specified buffer sizes for nests may be reduced on a case-by-case basis based on compelling biological and ecological reasoning (e.g., the biology of the bird species, concealment of the nest by topography, land use type, vegetation, and the level of project activity), and if a CPUC-approved qualified avian biologist determines that a reduced buffer size would not result in the abandonment of the nest or failure. Buffer reduction requests shall be submitted to the independent avian biologist (a qualified avian biologist approved by the CPUC and who reports directly to the CPUC) to be reviewed and approved. The independent avian biologist shall respond to PG&E's request for a buffer reduction within 48 hours. Buffer reduction requests for special status species (other than those specified in MM BIO-6 and MM BIO-7) shall be submitted to the appropriate wildlife agencies and to the CPUC for approval. The request must include the following:

- Species

- Location
- Pre-existing conditions present on site
- Description of the work to be conducted within the reduced buffer, including equipment type and start date
- Size and expected duration of proposed buffer reduction
- Reason for buffer reduction
- Name and contact information of the CPUC-approved qualified avian biologist who requested the buffer reduction and who shall conduct subsequent monitoring
- Proposed frequency and methods of monitoring necessary for the nest given the type of bird and surrounding conditions as recommended by the CPUC-approved qualified avian biologist

Nests shall be monitored until the avian biologist has determined that the nest is inactive; or construction ends within the standard buffer (whichever occurs first). The biologist shall halt construction and increase the reduced buffer size if it is determined that the nesting bird(s) are agitated or the incubating adult leaves the nest as a result of construction activities.

Nesting in Active Work Areas. Non-special status species found building nests within the standard buffer zone after specific project activities begin and the activities are not expected to increase in duration, intensity, or distance from the nest, shall be assumed tolerant of that specific project activity and such nests shall be protected by the immediate implementation of the maximum buffer practicable (as determined by the CPUC-approved avian biologist). Notification, which includes the same data in the above reduction request, shall then be sent to the CPUC's independent avian biologist within 24 hours and the independent avian biologist shall have the authority to increase the buffer distance. These nests shall be monitored on a schedule determined by the qualified CPUC-approved avian biologist during construction activities until the avian biologist has determined that the nest is inactive; or construction ends within the standard buffer zone (whichever occurs first). If the CPUC-approved avian biologist determines that the nesting bird(s) are not tolerant of project activities, the buffer shall be expanded, and may be expanded beyond the standard buffer distance.

MM BIO-5: Wildlife Protection (Supersedes APMs BIO-4, -5, and -10). The applicant shall implement the following measures to ensure protection of all wildlife species.

- Vehicle speed limits on existing unpaved access routes shall not exceed 15 miles per hour and shall not exceed 10 miles per hour on overland access roads. County speed limits shall be followed on existing paved roads. Construction personnel shall avoid collision with wildlife.
- If night work is required, all lighting shall be shielded and point downward and away from any identified sensitive biological resources.
- All trash and debris shall be secured in animal-proof containers before the end of each workday. Containers shall be emptied at least once per week and disposed of at an appropriate off-site location.
- All construction personnel shall not harass any wildlife and shall allow wildlife to leave the work area on their own volition.
- Disturbance limits shall be visibly flagged to ensure construction personnel minimize the construction footprint.

MM BIO-6: Specific Requirements for Burrowing Owl (Supersedes APM BIO-13). A CPUC-approved qualified avian biologist familiar with burrowing owl biology and survey methods shall conduct a pre-construction survey for this species no more than 30 days prior to construction activities during the non-breeding season and no more than 14 days prior to construction during the breeding season (February 1 to August 31 with some variance by geographic location and climatic conditions; CDFW 2012). The biologist shall confirm whether the owls are occupying the site and whether they are actively nesting. If any burrowing owl or sign of an occupied burrow is observed, the CPUC shall be informed as soon as possible (and within 48 hours). Surveys shall include the irrigation ditch and any area with suitable habitat within 656 feet (200 meters) of the project activities. If access to areas with suitable habitat is restricted, the biologist shall visually survey with a spotting scope, binoculars, or other visual techniques.

If an occupied burrow is identified, the CPUC-approved qualified biologist shall immediately implement a minimum 200 meter (656 foot) buffer. Then an appropriate burrow-specific buffer shall be recommended by the CPUC-approved qualified biologist based on the circumstances (e.g., owl tolerance and construction activity level) and as explained by the Staff Report on Burrowing Owl Mitigation (CDFW 2012 or more recent), which shall be approved by the CPUC and then implemented.

In areas where owl presence or owl sign is not found, weekly surveys for burrowing owl and its sign shall be conducted for the remainder of the first breeding season and all following breeding seasons. Survey areas shall include work areas where construction-related activities are occurring, and surveys shall adhere to the following procedures:

- A CPUC-approved qualified avian biologist shall conduct surveys for nesting birds within 7 days prior to the start of any construction-related activities. Areas shall be re-surveyed every 7 days while construction activities are occurring. If there is no work in an area for 7 days, it shall be considered a new work area if construction resumes. In addition, a CPUC-approved qualified monitor shall conduct pre-construction clearance sweeps for nesting birds at all work areas where suitable habitat is present within approximately 24 hours of construction activities each day during the nesting season.
- Surveys shall be conducted with the appropriate duration, level of effort, and timing based on level of construction disturbance, time of day, and environmental factors. Surveys shall be conducted in the irrigation ditch, and any area with suitable habitat within 656 feet (200 meters) of project activities, at a minimum. If access to areas with suitable habitat is restricted, the biologist shall visually survey with a spotting scope, binoculars, or other visual techniques.
- Surveys shall be conducted at a minimum between February 1 and September 15; however, the survey season may need to begin earlier or end later depending on species and weather conditions.
- Survey results shall be provided to the CPUC each week.

MM BIO-7: Specific Requirements for Special Status Raptors (Supersedes APM BIO-12). A CPUC-approved qualified avian biologist shall conduct pre-construction surveys for Swainson's hawk and white-tailed kite in appropriate habitat within 0.5 miles of project construction activities prior to the start of construction during breeding season (i.e., the "first" breeding season). The avian biologist shall be familiar with the survey methods and biology of these species. Surveys for Swainson's hawk shall follow the protocols outlined in the Recommended Timing and Methodology for Swainson's Hawk Nesting Surveys in California's Central Valley (CDFW 2000a or more recent).

If an active nest (i.e., when nest decoration begins) is identified within 0.5 miles of construction activities, then a CPUC-approved qualified avian biologist shall implement a 0.5 miles buffer around the nest. The CPUC and CDFW shall be informed of the nest as soon as possible (and within 48 hours). Requests to reduce standard buffers must be sent to the CPUC to be reviewed in coordination with CDFW.

If no indication of Swainson's hawk or white-tailed hawk nesting (indications include vocalizations or observations of nesting activities, nests, perched adults, displaying adults, eggs, chicks) is found during protocol-level surveys, weekly surveys for nesting Swainson's hawk and white-tailed kite shall be conducted for the remainder of the breeding season in all work areas where any construction-related activities are occurring, according to the following procedures:

- A CPUC-approved qualified avian biologist shall conduct surveys for nesting birds within 7 days prior to the start of any construction-related activities. Areas shall be re-surveyed every 7 days while construction activities are occurring. If there is no work in an area for 7 days, it shall be considered a new work area if construction resumes. In addition, a CPUC-approved qualified monitor shall conduct pre-construction clearance sweeps for nesting birds at all work areas where suitable habitat is present within approximately 24 hours of construction activities each day during the nesting season.
- Surveys shall be conducted with the appropriate duration, level of effort, and timing based on level of construction disturbance, time of day, and environmental factors. Survey areas shall include work areas and a 500-foot buffer, at a minimum.
- Surveys shall be conducted at a minimum between February 1 and September 15; however, the survey season may need to begin earlier or end later depending on species and weather conditions.
- Survey results shall be provided to the CPUC each week.

During subsequent breeding seasons following the first season, reconnaissance surveys for Swainson's hawk and white-tailed kite shall be performed in appropriate habitat and at the appropriate time within 0.5 miles of project construction activities in order to detect any new nesting activity. If no indication of nesting is found during reconnaissance surveys, weekly surveys for nesting Swainson's hawk and white-tailed kite shall be conducted for the remainder of the breeding season in all work areas where any construction-related activities are occurring (following procedures in the bullet points above).

Cultural Resources

MM CUL-1: Cultural Resources Monitoring and Treatment (supersedes APM CUL-3). A CPUC-approved archaeologist that meets the Secretary of Interior's Professional Qualifications Standards for archaeology shall implement the following procedures if an unanticipated cultural resource is discovered during construction.

Work shall be halted and excluded from within 100 feet of the resource. Protective barriers shall be installed with signage identifying the area as an "environmentally sensitive area." The CPUC shall be notified of the find. Total avoidance of the resource is preferred, and no additional mitigation is necessary if it is avoided. The resource shall be recorded on California Department of Parks and Recreation 523 forms and filed at the South San Joaquin Valley Information Center.

If the resource cannot be avoided, the CPUC-approved archaeologist shall determine in consultation with the CPUC if there is a potential for the resource to be historical (CEQA Guidelines section 15064.5(a))

or a unique archaeological resource (Public Resources Code 21083.2(g)). If the resource is not potentially a historical or unique archaeological resource, work can resume after the CPUC's concurrence. If the resource is potentially a historical or unique archaeological resource, the CPUC-approved archaeologist shall prepare an Evaluation Plan that details the procedures to be used to determine whether the resource is a historical or unique archaeological resource. The Evaluation Plan shall be submitted to the CPUC for review. The CPUC will approve or request changes to the Evaluation Plan within 7 days of submittal by PG&E. Once approved, the Evaluation Plan shall be implemented, and a report shall be prepared that indicates whether the resource is a historical resource or unique archaeological resource. If the discovery is not historical or a unique archaeological resource and the CPUC concurs with that determination, work may proceed in the area of the discovery. If the discovery is historical or a unique archaeological resource, PG&E shall prepare a Data Recovery Plan that would reduce impacts to less than significant.

The Data Recovery Plan shall be prepared in accordance with CEQA Guidelines section 15126.4(b)(3)(C) and PRC section 21083.2 and shall describe methods that will yield relevant information. The Data Recovery Plan shall be submitted to the CPUC for review and approval. The CPUC will approve or request changes to the Data Recovery Plan within 7 days of submittal by PG&E. Once approved, the applicant shall implement the plan. When the field work is completed, a Data Recovery Field Memo shall be prepared that briefly describes the data and materials recovery. The Data Recovery Field Memo shall be submitted to the CPUC for review and approval. The CPUC will approve or request changes to the Data Recovery Field Memo within 7 days of submittal by PG&E. Once the Data Recovery Field Memo has been approved, construction may proceed in the area of the discovery. A more detailed Data Recovery Report shall be prepared within 90 days of the Data Recovery Field Memo. The Data Recovery Report shall present thorough results of the data recovery efforts, conclusions drawn from the work, and where materials will be curated and shall also contain completed California Department of Parks and Recreation 523 forms. The Data Recovery Report shall be submitted to the CPUC for review and approval. Once approved, the Data Recovery Report and 523 forms shall be filed with the South San Joaquin Valley Information Center.

MM CUL-2: Worker Education Program (supersedes APM CUL-1, supplements APM CUL-4). PG&E shall design and implement a Worker Education Program that shall be provided to all project personnel who may encounter and/or alter historical resources or unique archaeological resources, including construction supervisors and field personnel. No construction worker will be involved in field operations without having participated in the Worker Education Program. The Worker Education Program shall include, at a minimum:

- A review of archaeology, history, prehistory and Native American cultures associated with historical resources in the project vicinity;
- A review of the types of resources that could be uncovered in the area, including historical artifacts associated with the nonextant historical complex at the Sanger Substation site;
- A review of applicable local, state, and federal ordinances, laws, and regulations pertaining to historic preservation and Native American resources;
- A discussion of procedures to be followed in the event that unanticipated cultural resources or human remains are discovered during implementation of the project;
- A discussion of disciplinary and other actions that could be taken against persons violating historic preservation laws and PG&E policies; and

- A statement by the construction company or applicable employer agreeing to abide by the Worker Education Program, PG&E policies and procedures, and other applicable laws and regulations.

MM CUL-3 (supersedes APM PAL-2): Unanticipated paleontological resource discovery protocol. If a previously unidentified paleontological resource is discovered during construction, PG&E shall immediately require that work be halted within 100 feet of the resource; measures be put in place to prevent further impacts to the resources, such as protective barriers and/or signs, and/or coverings; that PG&E's CPUC-approved Cultural Resources Specialist (CRS) and paleontological resource specialist be notified; and that the CRS notify the CPUC. PG&E's CPUC-approved paleontological resource specialist shall examine the find and determine whether it is unique under Part V of CEQA Guidelines Appendix G. The CPUC-approved paleontologist may develop significance criteria for the fossils likely to be yielded by the Riverbank Formation, subject to CPUC-approval (such criteria will be documented in the PRMMP discussed in MM CUL-4). In the absence of other agreed-upon criteria, a paleontological resource shall be considered unique if it meets the definition of a significant paleontological resource under the 2010 Society of Vertebrate Paleontology *Standard Procedures for the Assessment of Adverse Impacts to Paleontological Resources* definition:

> Significant paleontological resources are fossils and fossiliferous deposits, here defined as consisting of identifiable vertebrate fossils, large or small, uncommon invertebrate, plant, and trace fossils, and other data that provide taphonomic, taxonomic, phylogenetic, paleoecologic, stratigraphic, and/or biochronologic information. Paleontological resources are considered to be older than recorded human history and/or older than middle Holocene (i.e., older than about 5,000 radiocarbon years).

The results of the evaluation will be submitted to the CPUC, and the CPUC must determine whether or not the resource is unique. If the resource is determined not to be unique, work may commence in the area. If the resource is significant and can be avoided and thus not impacted, PG&E shall document the resource in accordance with professional standards, continue to flag the area for avoidance during construction, and take no further action. Preservation in place, i.e., avoidance, is the preferred method of mitigation for impacts to unique paleontological resources. However, if the resource is unique and cannot feasibly be avoided, PG&E shall consult with the CPUC to determine appropriate mitigation measures. Mitigation methods may include ensuring that fossils are recovered, prepared, identified, catalogued, and analyzed according to current professional standards under the direction of a qualified paleontologist. Methods of recovery, testing, and evaluation shall adhere to current professional standards for recovery, preparation, identification, analysis, and curation, such as the 2010 Society of Vertebrate Paleontology *Standard Procedures for the Assessment of Adverse Impacts to Paleontological Resources*. Work may commence after data recovery (if undertaken) and upon approval by the CPUC.

MM CUL-4 (supersedes APM PAL-3): Paleontological Resources Monitoring and Mitigation Plan. A qualified professional paleontologist shall prepare a Paleontological Resources Monitoring and Mitigation Plan (PRMMP) for the project before the onset of ground disturbing activities. The PRMMP shall be submitted to the CPUC for review and approval at least 30 days prior to the start of any excavation to 5 feet below ground surface. PG&E's CPUC-approved paleontological resource specialist shall direct implementation of the PRMMP.

The PRMMP shall include full-time monitoring of excavations extending more than 5 feet deep and auguring/boring extending to more than 5 feet deep and more than 3 feet in diameter, or in lieu of full-time monitoring, the PRMMP shall include the following requirements:

Initial Monitoring:

1. Prior to the start of construction, PG&E's CPUC-approved paleontological resource specialist shall identify a minimum number and array of excavation types (i.e. TSP foundation drilling, grading, retention pond) extending more than 5 feet deep and auguring/boring extending to more than 5 feet deep and more than 3 feet in diameter sufficient to obtain data to determine whether the project area is likely to yield significant paleontological resources. The placement of the locations requiring monitor will be developed by the paleontologist in consultation with PG&E's construction team, and will focus on volume of soil to be disturbed to produce a representative sample. The PRMMP shall identify the methods used (e.g., microscopic examination of matrix samples, visual examination of excavated material) to make the determination.
2. At all sites identified by PG&E's CPUC-approved paleontological resource specialist, a CPUC-approved paleontological field monitor shall monitor the excavation and auguring during the initial stages of construction (i.e., from the beginning of construction until a determination is made after initial monitoring as described in this item) to determine whether the project area is likely to yield significant paleontological resources.

Subsequent Monitoring: The results of initial monitoring shall be described in a memo, to be submitted to CPUC for review and approval. CPUC will review and either request revisions or approve the memo within 2 business days of submittal by PG&E. PG&E shall not reduce or stop monitoring until CPUC approves the memo. Based on the results of initial monitoring, the following measures shall be required and described in the PRMMP:

- If PG&E's CPUC-approved paleontological resource specialist determines that no part of the project area is likely to yield significant paleontological resources, further monitoring shall not be required. PG&E must still make available the paleontological resource specialist and paleontological field monitor (available to go to the work site as needed). Training provided pursuant to APM PAL-1 will enable work crews to identify likely fossils, and inform the appropriate parties if such deposits are identified.
- If PG&E's CPUC-approved paleontological resource specialist discovers significant paleontological resources or determines the project area is likely to yield significant paleontological resources, then continued monitoring shall be required as deemed appropriate by the paleontological resource specialist, in consultation with the CPUC and PG&E's construction team, based on the nature, location, and geologic context of the fossil(s), as well as the potential for further disturbance.

If a paleontological resource is discovered at any time during initial monitoring, continued monitoring, or unmonitored construction, PG&E shall notify the CPUC immediately and the paleontological resource specialist will inspect the matrix for fossils. If a paleontological resource is discovered, MM CUL-3 shall be implemented.

MM CUL-5: Undiscovered potential Tribal Cultural Resources. The following procedure shall be employed (after stopping work and following the procedure for determining eligibility in MM CUL-1) if a resource is encountered and determined by the project's qualified archaeologist to be eligible for the CRHR or a local register of historic resources and is associated with a California Native American Tribe(s) with a traditional and cultural affiliation with the geographic area of the proposed project:

- The project's qualified archaeologist shall notify the CPUC for appropriate action. PG&E will assist the CPUC if needed to identify the lead contact person for the California Native American Tribe(s) potentially associated with the cultural resource and with a traditional and cultural affiliation with the geographic area of the proposed project. The CPUC will contact the lead contact person to set up a meeting with PG&E and the CPUC.
- The project's qualified archaeologist shall participate with the CPUC in discussions with the California Native American Tribe(s) whether the resource is a "tribal cultural resource" as defined by PRC section 21084.3(b) and the tribe(s)' preferred method of mitigation, if the resource is determined to be a TCR.
- If no agreement can be reached for mitigation after discussions with the California Native American Tribe(s) or it is determined that the tribe(s)' preferred mitigation is not feasible, PG&E will implement one of the example mitigation measures listed in PRC section 21080.3(b), or other feasible mitigation.

Hazards and Hazardous Materials

MM HAZ-1: Hazardous Materials Management Plan (supersedes APM HAZ-2 and APM HAZ-4). Prior to construction, the applicant shall prepare a Hazardous Materials Management Plan, which shall be implemented during construction to prevent the release of hazardous materials and hazardous waste. The plan shall include the following requirements and procedures:

1. Training requirements for construction workers in appropriate work practices, including spill prevention and response measures. Additional training requirements for those performing excavation activities shall be required and shall include training on types of contamination and contaminants (e.g., petroleum hydrocarbons, asbestos, and hazardous materials [as defined by the California HSC]) and identifying potentially hazardous contamination (e.g., stained or discolored soil and odor).
2. Contain all hazardous materials at work sites and properly dispose of all such materials.
    a. Hazardous materials shall be stored on pallets within fenced and secured areas and protected from exposure to weather and further contamination.
    b. Fuels and lubricants shall be stored only at designated staging areas.
3. Maintain hazardous material spill kits for small spills at all active work sites and staging areas. Thoroughly clean up all spills as soon as they occur.
4. Store sorbent and barrier materials at all construction staging areas, including staging areas used during activities for decommissioning. Sorbent and barrier materials will be used to contain runoff from contaminated areas and from accidental releases of oil or other potentially hazardous materials.

5. Perform all routine equipment maintenance at a shop or at the staging area and recover and dispose of wastes in an appropriate manner.
6. Monitor and remove vehicles used for construction-related activities with chronic or continuous leaks from use and complete repairs before returning them to operation.
7. Store shovels and drums at the staging areas. If small quantities of soil become contaminated, use shovels to collect the soil and store in drums before proper offsite disposal. Large quantities of contaminated soil may be collected using heavy equipment and stored in drums or other suitable containers prior to disposal. Should contamination occur adjacent to staging areas because of runoff, shovels and/or heavy equipment shall be used to collect the contaminated material. Only trained construction workers shall handle hazardous, and potentially hazardous, materials.
8. Transporting, shipping, and disposal procedures for hazardous waste.
9. Procedures for notifying applicant and agency personnel in the event of the discovery of contaminated soil and/or groundwater. Contact information for federal, regional, and local agencies, the applicant's environmental coordinator(s) responsible for the cleanup of contaminated soil or groundwater, and licensed disposal facilities and haulers.

This plan will be submitted to the CPUC for review and approval 30 days prior to the start of construction of the proposed project.

MM HAZ-2: Fire Control Measures. PG&E shall implement the following measures prior to and during work at the Fence Meadow Repeater Station:

1. As part of the Worker Training Program, workers will be trained in fire prevention and response practices to be implemented to minimize the risk of fire, and in the event of fire, trained to provide immediate response. At minimum, construction personnel shall be trained in fire reporting and incipient-stage fire prevention, control, and extinguishing (i.e., the fire can be controlled or extinguished by portable fire extinguishers, small hose systems, or portable water supplies without the need for protective clothing or breathing apparatus.)
2. Prohibit smoking at the worksites other than in designated areas chosen that are free of ignitable material. Require disposal of cigarette butts in a way that will not ignite vegetation or other materials.
3. Ensuring an appropriate fire extinguisher is present before initiating and during each hot-work activity (e/g/, welding, brazing, soldering, grinding, and arc cutting).
4. Preventing vehicles with hot exhaust manifolds from idling on roads with combustible vegetation under the vehicles.
5. Do not park vehicles in areas with vegetation prone to ignition.
6. Equip all vehicles with a fire extinguisher.

Transportation and Traffic

MM TRAN-1: Traffic Management Plan (supersedes APM TRAN-1). A Traffic Management Plan shall be prepared upon determination of the final construction schedule and precise locations and durations of lane closures and other project details. Measures to be included in the plan that would allow for:

- Safe vehicle passage shall adhere to the California Manual on Uniform Traffic Control Devices.

- Avoidance of truck queuing on South McCall Avenue of trucks waiting to enter the substation construction site.

Potential measures include:

- Flaggers and/or signage to halt traffic and direct traffic at lane closures and to allow traffic to pass when construction is halted.
- Scheduling lane closures at off-peak times.
- Notification of emergency services providers of the timing, location, and duration of lane closures.
- Requirement that emergency vehicle access is maintained at all times.
- Scheduling construction deliveries and employee arrival to be spread out throughout the day.
- Implementing traffic control within the substation site to move vehicles to allow arriving vehicles to enter the site.

The Traffic Management Plan shall also include the following measures:

- **Limit Vehicle Speeds:** Vehicle speeds shall be limited to 15 miles per hour on unpaved roadways used to access the site during construction. PG&E shall notify owners of property on which internal access roads are located at least one week in advance that the internal access road will be used for construction traffic.
- **Slow Truck Warning:** During truck delivery and exit hours, PG&E shall post signage at appropriate locations (e.g., along South McCall and East Jensen Avenues) warning drivers when there is a possibility for slow trucks to exit the substation site onto South McCall Avenue. Signage shall adhere to the California Manual on Uniform Traffic Control Devices.
- **Road Damage Repair:** PG&E shall repair to pre-project conditions any roads damaged by project vehicle traffic. PG&E shall document roadway conditions with photographs prior to project activities along East Jensen Avenue and South McCall Avenue adjacent to the project area and extending 0.25 miles from the project area. PG&E shall also take photographs after the project is completed and after any repairs that document restoration of pre-project pavement conditions.
- **Emergency Service Provider Notification**: PG&E shall notify the provider of the location, date, time, and duration of the lane closure. PG&E shall make provisions to maintain emergency vehicle access at all times in coordination with local emergency service providers, such as allowing for bypass of slow vehicle traffic during lane closures.

To the extent that compliance with applicable permit requirements, e.g., obtaining the required encroachment permit from Fresno County, would reduce identified significant traffic impact(s) consistent with the performance standards set forth in MM TRAN-1, PG&E may submit such permit(s) in lieu of addressing that impact, subject to review and approval by CPUC prior to the start of construction.

2. Environmental Determination

2.1 Environmental Factors Potentially Affected

The environmental factors checked below would be potentially affected by this project, involving at least one impact that is a "Potentially Significant Impact" and requiring implementation of mitigation as indicated by the checklist on the following pages.

- ☒ Aesthetics
- ☐ Greenhouse Gas Emissions
- ☐ Geology and Soils
- ☐ Land Use and Planning
- ☐ Population and Housing
- ☒ Transportation and Traffic
- ☒ Agriculture and Forestry Resources
- ☒ Biological Resources
- ☒ Hazards and Hazardous Materials
- ☐ Mineral Resources
- ☐ Public Services
- ☐ Utilities and Service Systems
- ☐ Air Quality
- ☒ Cultural Resources
- ☒ Hydrology and Water Quality
- ☐ Noise
- ☐ Recreation
- ☒ Mandatory Findings of Significance

2.2 Environmental Determination

On the basis of this initial evaluation:

☐ I find that the proposed project COULD NOT have a significant effect on the environment, and a **NEGATIVE DECLARATION** will be prepared.

☒ I find that although the proposed project could have a significant effect on the environment, there will not be a significant effect in this case because revisions in the project have been made by or agreed to by the project proponent. A **MITIGATED NEGATIVE DECLARATION** will be prepared.

☐ I find that the proposed project MAY have a significant effect on the environment, and an **ENVIRONMENTAL IMPACT REPORT** is required.

☐ I find that the proposed project MAY have a "potentially significant impact" or "potentially significant unless mitigated" impact on the environment, but at least one effect 1) has been adequately analyzed in an earlier document pursuant to applicable legal standards, and 2) has been addressed by mitigation measures based on the earlier analysis as described on attached sheets. An **ENVIRONMENTAL IMPACT REPORT** is required, but it must analyze only the effects that remain to be addressed.

☐ I find that although the proposed project could have a significant effect on the environment, because all potentially significant effects (a) have been analyzed adequately in an earlier EIR or NEGATIVE DECLARATION pursuant to applicable standards, and (b) have been avoided or

mitigated pursuant to that earlier EIR or NEGATIVE DECLARATION, including revisions or mitigation measures that are imposed upon the proposed project, nothing further is required.

Billie Blanchard

1/9/2017

Billie Blanchard, Project Manager
Energy Division
California Public Utilities Commission

Date

3. Introduction to the Initial Study

3.1 Proposed Project Overview

Pacific Gas and Electric Company (PG&E), a regulated California utility, filed an application with the California Public Utilities Commission (CPUC) on September 30, 2015, for a Permit to Construct (PTC) the Sanger Substation Expansion Project (proposed project). The application was deemed complete by the CPUC on January 26, 2016.

PG&E is proposing to expand the existing Sanger Substation in unincorporated Fresno County, California, to contain a new breaker-and-a-half bus configuration. As proposed by PG&E, the project includes:

- **Substation Expansion:** PG&E would install equipment including circuit breakers, switches/disconnects, steel support structures for disconnect switches, bus supports and Capacitor Coupling Voltage Transformer equipment, two Modular Protection Automation Control (MPAC) buildings, and a microwave tower for communications. PG&E would also elevate the existing transfer bus and make alterations to interconnect reconfigured power lines.
- **Substation Equipment Removal:** PG&E would remove obsolete circuit breakers, switches, steel support structures, and the concrete control building at the existing substation.
- **Power Line Reconfiguration:** PG&E would rearrange existing power lines leading to the substation by removing existing lattice steel towers (LSTs) and wood poles and installing tubular steel poles (TSPs) in a different alignment. Existing power lines would be relocated to change their angle.
- **Existing Substation Changes:** On transformer bank 1, PG&E would remove wood poles that support a temporary line from the dead end structure and would replace them with a new TSP to terminate the new 115kV line for bank 1. On transformer bank 3, PG&E would relocate the existing dead end structure to terminate at the new 115kV line for bank 3 using new TSPs.
- **Telecommunications Receiver:** PG&E would install two antenna dishes on an existing microwave tower at the Fence Meadow Repeater Station.

The proposed project would increase reliability of electric service by upgrading the equipment at the existing substation to be in conformance with PG&E internal design standards as well as industry standards.

3.2 Environmental Analysis

3.2.1 CEQA Process

This Initial Study (IS) has been prepared pursuant to the California Environmental Quality Act (CEQA), the amended State CEQA Guidelines (14 California Code of Regulations 15000 *et seq.*) and the CPUC CEQA rules (Rule 2.4). The purpose of this IS is to inform the decision-makers, responsible agencies, and the public of the proposed project, describe the existing environment that would be affected by the project, and identify the potential environmental effects that would occur if the project is approved. The IS also identifies proposed mitigation measures that would avoid or reduce environmental effects.

All potentially significant impacts associated with the project can be mitigated to a level below significance; therefore, a Mitigated Negative Declaration (MND) can be adopted by the CPUC in accordance with Public Resources Code section 21080.

3.2.2 CEQA Lead Agency

The CPUC is the lead agency for review of the project under CEQA because the CPUC is the agency that must decide whether to adopt the MND and to approve or deny the PTC.

3.2.3 Initial Study

The IS presents an analysis of potential effects of the proposed project on the environment. The IS has been prepared based on information from PG&E's Proponent's Environmental Assessment and associated submittals, site visit, CPUC data requests, and additional research.

Construction activities could have direct and indirect impacts on the environment. The following environmental parameters are addressed in the IS, based on the potential for the proposed project to have effects on the environment:

- Aesthetics
- Agricultural Resources
- Air Quality
- Greenhouse Gases
- Biological Resources
- Cultural Resources
- Geology and Soils
- Greenhouse Gases
- Hazards and Hazardous Materials
- Hydrology and Water Quality
- Land Use and Planning
- Mineral Resources
- Noise
- Population and Housing
- Public Services
- Recreation
- Traffic and Transportation
- Utilities and Service Systems
- Mandatory Findings of Significance

The IS has been organized into the following sections:

- **Section 3: Introduction.** Provides an introduction and overview of the proposed project and the CEQA process, and identifies key areas of environmental analysis.
- **Section 4: Project Description.** Presents the project objectives and provides an in-depth description of the proposed project, including construction details and methods.
- **Section 5: Environmental Setting and Environmental Impacts**. Includes a description of the existing conditions and the analysis on the proposed project's potential environmental impacts, and identifies mitigation measures to reduce potentially significant impacts to less than significant levels.
- **Section 6: Mitigation Monitoring and Reporting Plan.** Identifies the monitoring requirements for application proposed measures, mitigation measures that PG&E must implement as part of the project, actions required to implement these measures, monitoring requirements, and timing of implementation for each measure.

- **Appendices.** Includes the list of preparers of the IS/MND and persons contacted during its preparation, the air quality and greenhouse gas emissions estimated from the California Emissions Estimator Model (CalEEMod), and cultural resources consultation documentation.

This page intentionally left blank.

4. Project Description

4.1 Project Title

Sanger Substation Expansion Project
Pacific Gas and Electric Company (PG&E) Application No. A.15-09-012

4.2 Lead Agency Name and Address

California Public Utilities Commission
Energy Division
505 Van Ness Avenue
San Francisco, California 94102

4.3 Lead Agency Contact Person and Phone Number

Billie Blanchard, Project Manager
Energy Division
(415) 703-2068
billie.blanchard@cpuc.ca.gov

4.4 Project Location

Figure 4-1 shows the proposed project location in unincorporated Fresno County. The existing Sanger Substation ("Sanger Substation") is located about 2 miles west of the City of Sanger and about 3.5 miles southeast of the City of Fresno, at the northwest corner of the intersection of East Jensen Avenue and South McCall Avenue. The substation expansion area for the expanded Sanger Substation ("proposed project") would primarily be located adjacent to and north of Sanger Substation, with a small portion of the expansion area located adjacent to and west of Sanger Substation. The transmission line component of the proposed project would be located south, east, and west of Sanger Substation; all transmission line work would occur within approximately 0.5 miles of the Sanger Substation boundary. The telecommunications component of the proposed project includes building a new microwave tower and antenna system to support the substation's communication, located within the substation site and installation of a receiving antenna system at an existing communications site in the Sierra National Forest.

4.5 Project Sponsor's Name and Address

Pacific Gas and Electric Company
77 Beale Street
San Francisco, California 94105

4.6 General Plan Designation

The entire project area—including the substation expansion area, power line reconfiguration area, access roads, and laydown areas—is located on land classified as Agriculture in the Fresno County General Plan. Within a half-mile of the project area, lands are also designated as Agriculture under the Fresno County General Plan.

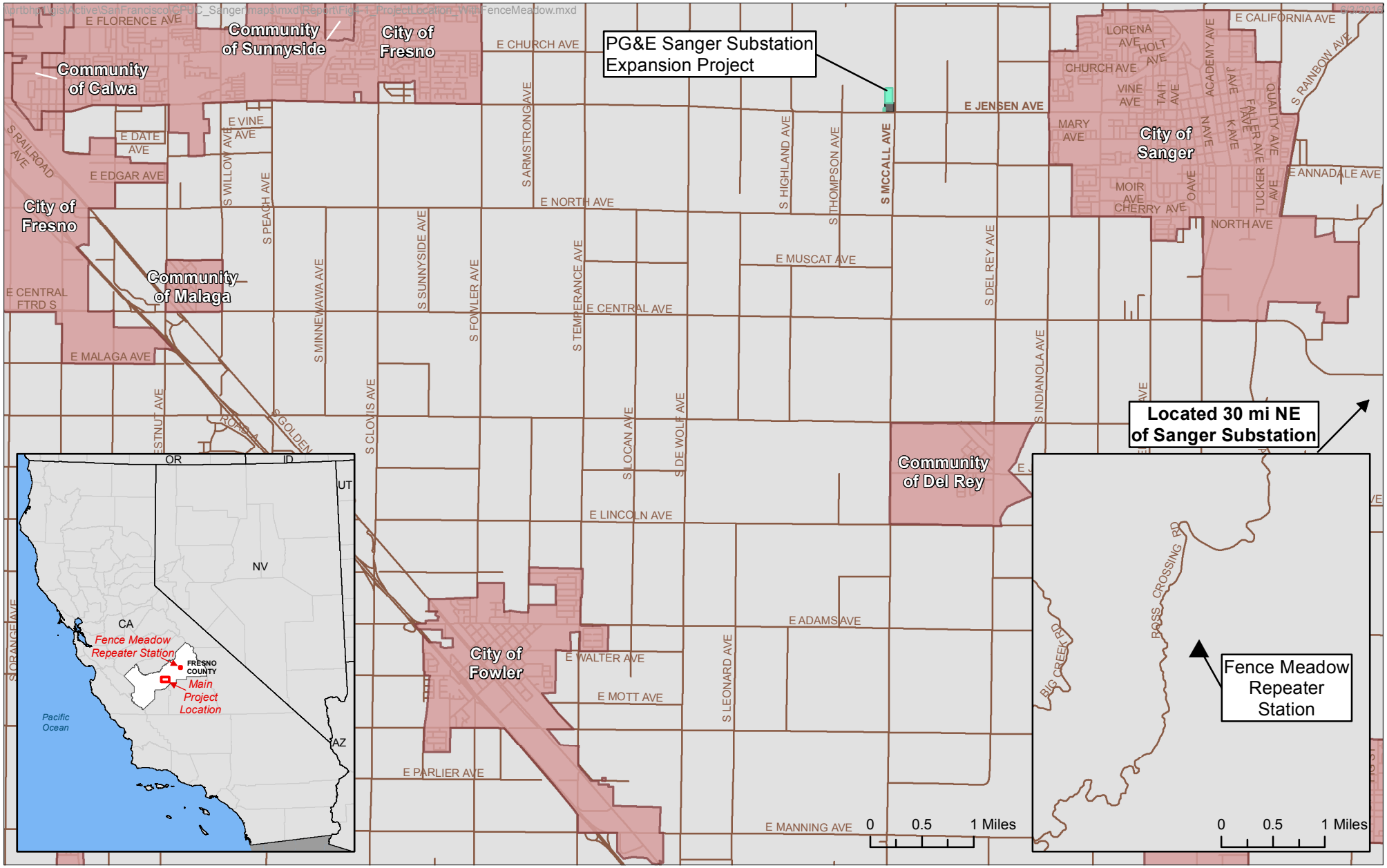

▲ Fence Meadow Repeater Station

Proposed Substation Expansion Footprint

Existing Substation Footprint

Source: PG&E 2015
Basemap: ESRI 2010

Figure 4-1
Project Location
Sanger Substation
Fresno County, CA

4.7 Zoning

The zoning designation for the entire project area is Exclusive Agricultural District, 20-acre minimum lot size (AE-20) lands. Within a half-mile of the project area, lands are also zoned as AE-20 under the Fresno County zoning ordinance.

4.8 Surrounding Land Uses and Setting

Land use in the project area is predominantly agriculture and existing utility infrastructure. The proposed project area would be located on agricultural land adjacent to the existing substation and currently used to grow row crops. Existing land uses along the proposed reconfigured power line routes include primarily agricultural uses (i.e., row crops and vineyards). Within a half-mile of the project area, land use is mainly agricultural. Residences, a church, and some commercial buildings (e.g., a small market) are also located nearby.

4.9 Other Public Agencies Whose Approval is Required

The California Public Utilities Commission (CPUC) is the lead agency under the California Environmental Quality Act (CEQA) because it must determine whether or not to issue a Permit to Construct for the proposed project. In addition to the Permit to Construct, PG&E would need to obtain other permits to implement the proposed project. Table 4-1 lists the permits and approvals that PG&E may need to construct the proposed project. It is not anticipated that permits from federal agencies would be needed.

Table 4-1 Potential Permits and Approvals

Permit/Approval	Agency	Requirement
National Pollutant Discharge Elimination System (General Construction Storm water Permit)	State Water Resources Control Board	PG&E would disturb more than 1 acre of land during proposed project construction.
Roadway Encroachment Permit	Fresno County	PG&E would conduct work within Fresno County roadways (East Jensen Avenue and South McCall Avenue) and construct two new driveways off South McCall Avenue for substation access.
Building Permit	Fresno County	PG&E would construct two Modular Protection Automation Control buildings and a 9-foot-tall security fence.
Dust Control Plan	San Joaquin Valley Air Pollution Control District	PG&E would disturb more than 5 acres during proposed project construction.
Informal Notification	United States Forest Service, Sierra National Forest	PG&E would install an antenna system at the Fence Meadow Repeater Station.

Source: PG&E 2015.
Key:
PG&E Pacific Gas and Electric Company

4.10 Description of the Proposed Project

PG&E proposes to expand Sanger Substation and modify existing power lines to connect to the expanded substation.

4.10.1 Overview

PG&E's proposed project consists of expanding Sanger Substation in unincorporated Fresno County, California, to contain a new breaker-and-a-half (BAAH) bus[1] configuration. The proposed project consists of the following components:

- **Substation Expansion:** PG&E would install equipment including circuit breakers, switches/disconnects, steel support structures for disconnect switches, bus supports and Capacitor Coupling Voltage Transformer equipment, two Modular Protection Automation Control (MPAC) buildings, and a microwave tower for communications. PG&E would also elevate the existing transfer bus and make alterations to interconnect reconfigured power lines.
- **Substation Equipment Removal:** PG&E would remove obsolete circuit breakers, switches, steel support structures, and the concrete control building at the existing substation.
- **Power Line Reconfiguration:** PG&E would rearrange existing power lines leading to the substation by removing existing lattice steel towers (LSTs) and wood poles and installing tubular steel poles (TSPs) in a different alignment. Existing power lines would be relocated to change their angle.
- **Existing Substation Changes:** On transformer bank 1, PG&E would remove wood poles that support a temporary line from the dead end structure and would replace them with a new TSP to terminate the new 115kV line for bank 1. On transformer bank 3, PG&E would relocate the existing dead end structure to terminate at the new 115kV line for bank 3 using new TSPs.
- **Telecommunications Receiver:** PG&E would install two antenna dishes on an existing microwave tower at the Fence Meadow Repeater Station.

4.10.2 Project Objectives

The objectives of the proposed project, as defined by the CPUC based on objectives provided by PG&E in the Proponent's Environmental Assessment (PEA), are:

- **Upgrade equipment at Sanger Substation to meet current utility standards:** Aging equipment would be upgraded to be in conformance with PG&E's internal design standards (based on industry best practices) as well as with Institute of Electrical and Electronic Engineers' safety standards.
- **Build a more reliable substation:** The upgrade to a BAAH bus configuration would increase the reliability of the substation because only two circuit breakers on each BAAH bay would be in use at any given time, allowing the third breaker to be removed from service for maintenance without service interruption at either of the two circuits; a failure of one of the dedicated circuit breakers would affect only the circuit it is connected to; and the two circuit breakers between the busbars would allow for operational flexibility in failure conditions.
- **Minimize ratepayer costs and environmental impacts:** PG&E seeks to design and build the project in a cost-effective manner that will also minimize environmental impacts.

[1] A *busbar* or *bus* is a conductor that connects two or more electrical circuits.

- **Maintain power delivery during construction:** PG&E aims to limit power interruption during construction of the expanded substation.

4.10.3 Existing Substation and Transmission System

Existing Sanger Substation

Sanger Substation was built in the 1920s. It is currently designed as a "main and transfer bus configuration." Under this configuration, all of the circuits connected to the substation are connected to the main busbar. The existing busbar allows for maintenance of equipment without loss of power. However, in the event of a fault in the main busbar, both existing circuit breakers would be affected and could not transmit electricity, resulting in an outage; thus, the existing busbar is unreliable compared to current industry standards. Equipment currently at Sanger Substation includes:

- 115-kilovolt (kV) switchrack
  - 16 115-kV circuit breakers (eight oil-filled, eight filled with sulfur hexafluoride [SF_6])
  - 83 steel support structures
  - 24 115-kV disconnect switches
- 12-kV switchrack
  - Two buses that connect to each of the two distribution banks
- Two 115/12-kV 30-megavolt ampere transformer banks
- Battery building
- Poles and towers located inside substation fence.
- MPAC Building

A gated entrance on South McCall Avenue provides vehicle access to the Sanger Substation.

Transmission System

Sanger Substation acts as a 115-kV hub for power transfer between the Fresno north and south metropolitan areas in the Central Valley. Sanger Cogeneration Plant, Balch Power House, and Kings River Power House generate power that is transmitted through Sanger Substation. McCall is the main substation that imports power into Sanger Substation. About 200 megawatts of power are imported and exported through Sanger Substation under peak conditions. Sanger Substation distributes electricity to Manchester, Barton, Airways, California Avenue, Malaga, West Fresno, Las Palmas, Clovis, Reedley, and Parlier Substations. Twelve 115-kV power lines connect to Sanger Substation. Figure 4-2 provides a schematic of the transmission system.

PG&E has recently upgraded power lines that connect other substations to Sanger Substation. These upgrades, shown on Figure 4-2, improved the service reliability of the 115-kV transmission system that serves the Fresno metropolitan area via Sanger Substation as follows:

- *Sanger–California Avenue 70-kV power line conversion:* PG&E converted the Sanger–California Avenue 70-kV power line to 115 kV in 2011.
- *Sanger–Reedley Area Reinforcement project:* PG&E reconductored the Sanger–Reedley 70-kV line to upgrade it to 115 kV in 2013. PG&E removed 70-kV equipment (i.e., transformer bank and 70-kV busbar) from Sanger Substation following this upgrade.

Reference: *Fig. 2-3, Regional Transmission System*, PG&E Sanger Substation Expansion Project, Proponent's Environmental Assessment, September 2015

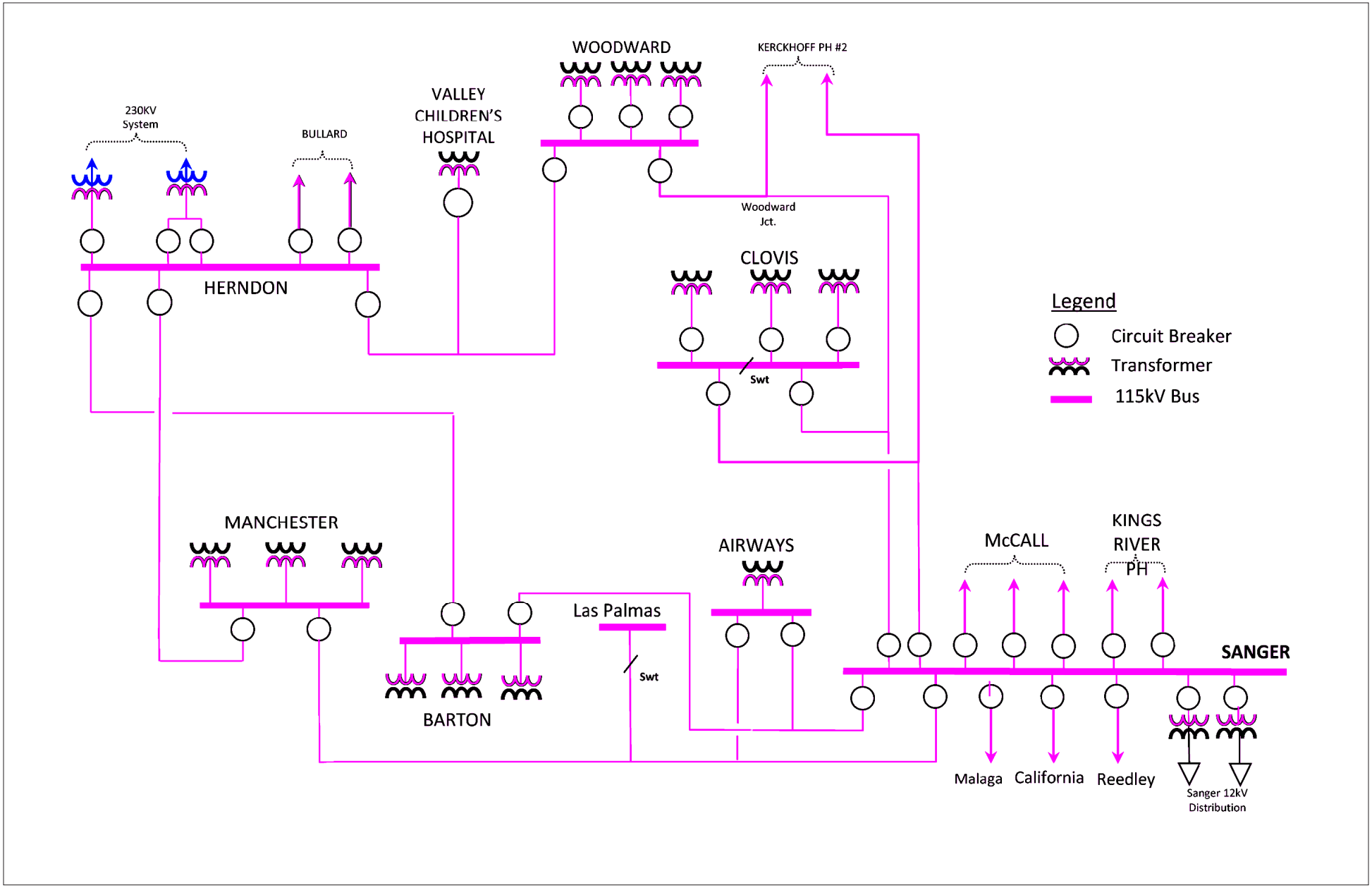

1009376.0001.03.a.ai 05/31/2016

Figure 4-2

Transmission System Schematic

Sanger Substation Expansion Project

4.10.4 Project Components

Substation Expansion

Expansion Area

The proposed project would take up a larger footprint than the existing Sanger Substation. The substation footprint would expand into an area measuring about 6.6 acres to the north of the existing Sanger Substation footprint. The substation area would also expand into an area measuring about 0.5 acres to the west of the existing substation (refer to Figure 4-3). With implementation of the proposed project and when adding the existing substation footprint of 4.5 acres, the expanded substation's footprint would measure about 11.6 acres in total.

New Substation Equipment and Configuration

The Sanger Substation expansion would involve constructing a new switchrack at the substation in a BAAH bus configuration. Under the BAAH bus configuration, Sanger Substation would have seven BAAH bays. The substation layout is shown in Figure 4-4. Each BAAH bay would connect to two elements (either a transmission line circuit or a transformer) and would have three 115-kV circuit breakers insulated with SF_6. The three circuit breakers on each BAAH bay would connect two circuits or transformers. Each of the two circuits or transformers would have its own dedicated circuit breaker. The third circuit breaker on the bay would be shared between the two circuits or transformers. Two circuit breakers would be tie-in breakers located between the two busbars. The new transfer bus would have a greater minimum vertical clearance than the removed transfer bus. There would be a total of 23 circuit breakers. Additionally, there would be up to 18 bus support structures and 28 switch structures, 21 dead end structures and 14 coupling capacitor voltage transformer structures. This configuration provides greater reliability.

Two new control/MPAC buildings would be constructed to house protective relaying and communications equipment. These buildings would replace an existing control building. They would be covered in steel sheeting and have a sloped roof painted a non-reflective neutral color. The buildings would be about 98 feet long by 15 feet wide by 11 feet tall. Operations equipment would include instrument transformers, protective relaying equipment, metering and control equipment, remote supervisory control and data acquisition equipment, telemetering equipment, an auxiliary alternating current and direct current power system, and an electric grounding system. The expanded substation would also include underground conduit and trench systems. The duct banks would be located across 2,500 square feet of the substation expansion area, with the excavation area for the ground grid covering about 22,000 square feet.

Substation lighting, including security lighting, would consist of non-glare light-emitting diode (LED) lamps that would be hooded and would be designed to avoid lighting off-site locations. Lights would be located on:

- 10-foot-tall galvanized steel poles
- Transfer bus structures
- MPAC buildings
- MPAC building landings

There would be a total of 107 lights in the substation area; there are currently 47 lights, and the expanded substation would have 60 more. A 9-foot-tall security fence with barbed wire would also be installed around Sanger Substation.

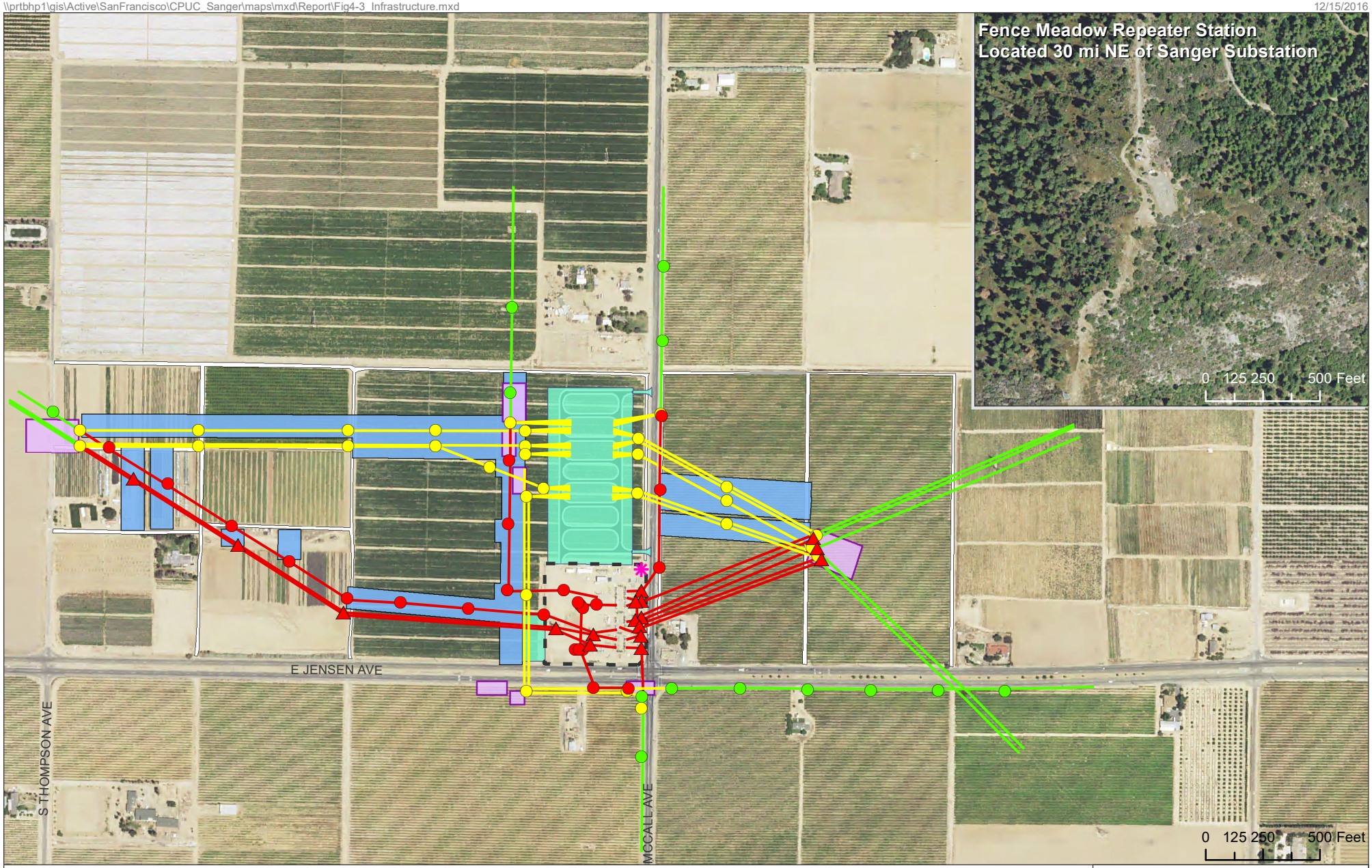

Existing Gate on South McCall Ave

Fence Meadow Repeater Station (Inset only)

Existing Pole to Remain

New Pole to be Installed

Existing Pole to be Removed

Existing Tower to be Removed

Existing Line to Remain

Existing Lines to be Removed

New Line Installed

Pull and Tension Sites

Proposed Substation Expansion Footprint

Existing Substation Footprint

Temporary Access Road

Construction Access Road

Existing Farm Road

Source: PG&E 2015, 2016
Basemap: NAIP 2014

Figure 4-3
Existing and Proposed Infrastructure
Sanger Substation
Fresno County, CA

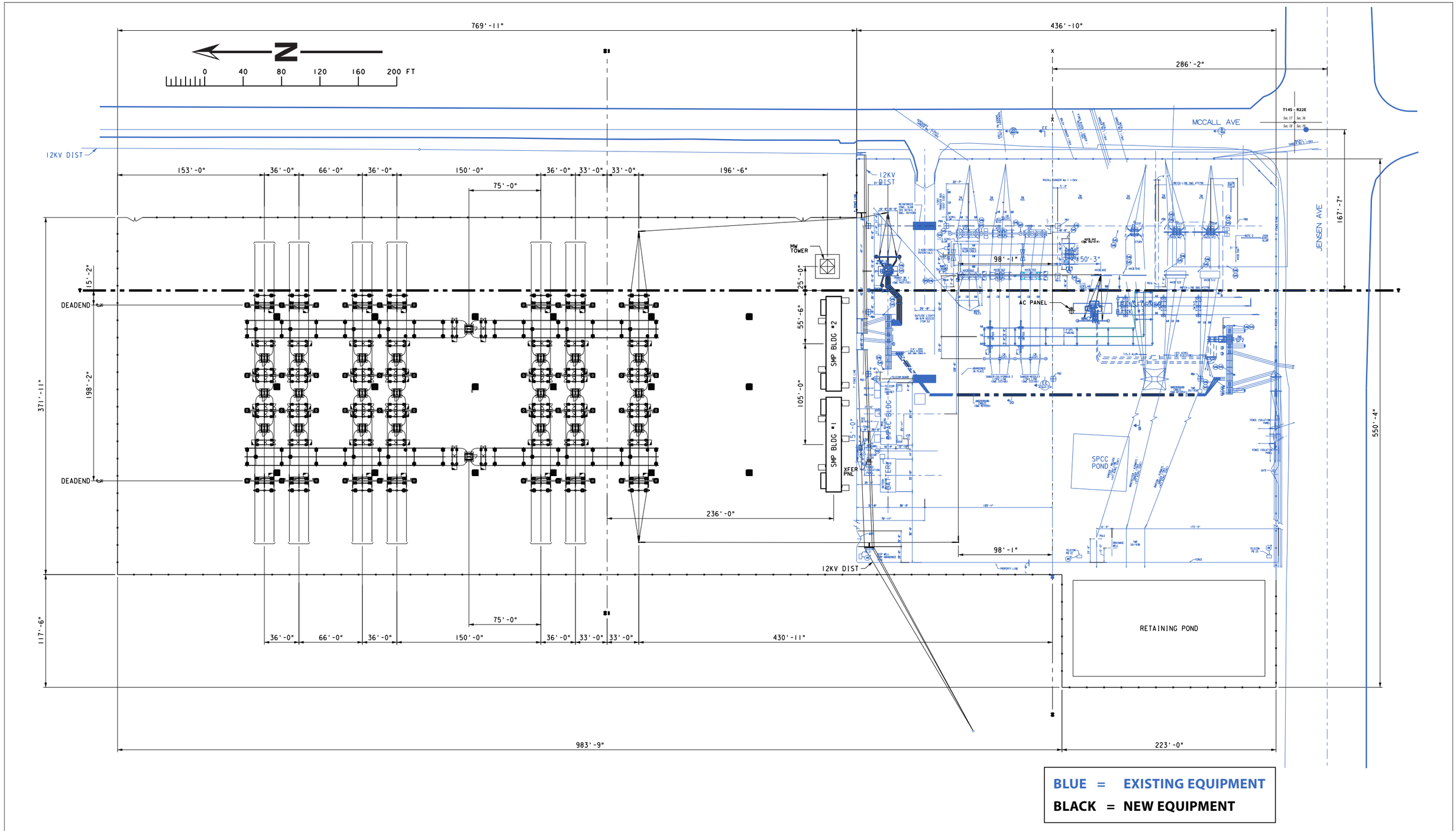

1009376.0001.03.e.ai 06/09/2016

Figure 4-4 **Substation Layout**
Sanger Substation Expansion Project

This page intentionally left blank.

The expanded substation would have space for five additional BAAH bays. Further build out of the substation is unlikely to occur for at least 20 years, if at all. There are no known planned generation projects proposing to connect to Sanger Substation. This potential future expansion is therefore not considered reasonably foreseeable and its impacts are not analyzed in this Initial Study/Mitigated Negative Declaration (IS/MND).

Stormwater Retention

A stormwater retention basin (approximately 200 by 100 feet wide and 2 feet deep) would be constructed in the expansion area located to the west of the southern portion of the existing substation, just north of East Jensen Avenue. Refer to Figure 4-3. The substation site would be graded slightly downslope from east to west toward the retention basin. The substation site would be tied into the basin with a swale.

Telecommunications Tower

PG&E would install a microwave tower at the substation site to support a new antenna system. The tower would be 80 to 100 feet tall and would be within the expanded substation's fenceline. The location of the tower is shown on Figure 4-3; a diagram of a typical tower is shown in Figure 4-5. The tower would require either a reinforced concrete slab foundation or a drilled pier foundation. A reinforced concrete slab foundation can be up to approximately 42 inches thick, covering a 25-by-25-foot area. A drilled pier foundation can be approximately 40 feet deep. The antennas mounted on the microwave tower would communicate with the existing PG&E Fence Meadow Repeater Station, which is located approximately 30 miles north of Sanger Substation as shown on Figure 4-1. Only the receiving antenna system would be installed at the Fence Meadow Repeater Station. PG&E would mount two dishes on an existing tower at the Fence Meadow Repeater Station. Each dish would measure about 4 feet in diameter. Existing dishes on the existing tower at the Fence Meadow Repeater Station are shown in a photograph in Figure 4-5.

Removal of Existing Substation Equipment

The existing 115/12-kV transformer banks at Sanger Substation would be retained, as would the 12-kV distribution facilities. Facilities to be removed from Sanger Substation include the switchrack, which contains:

- 16 115-kV circuit breakers (eight SF_6-filled, eight oil-filled)
- 24 disconnect switches
- 71 steel support structures
- Main and transfer buses
- Existing control and relay racks, which will be removed from the existing MPAC building

The concrete control building would also be demolished.

Substation Access

Permanent substation access would be provided through two new driveways and access roads from South McCall Avenue.

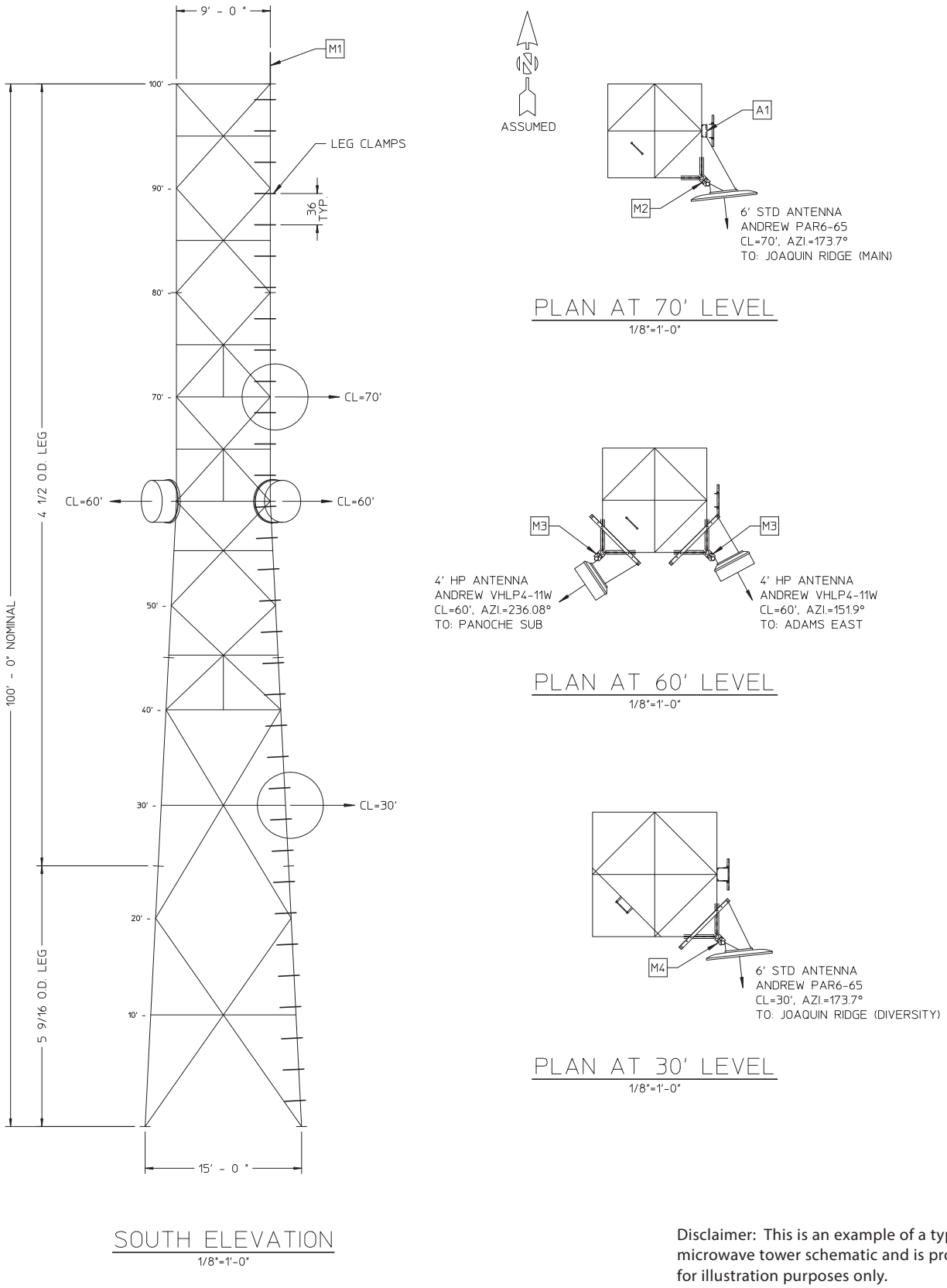

Disclaimer: This is an example of a typical microwave tower schematic and is provided for illustration purposes only.

1009376.0001.03.c.ai 06/01/2016

Figure 4-5

Diagram of Typical Microwave Tower

Sanger Substation Expansion Project

Power Line Reconfiguration

No new power lines would be constructed. The power lines that currently connect to Sanger Substation would be realigned due to the change in equipment positioning at Sanger Substation. New structures were designed in accordance with PG&E Overhead Transmission Line Design Criteria 068177 and also meet the recommendations from Avian Power Line Interaction Committee (APLIC) regarding separation of transmission lines. The existing structures were designed and constructed prior to the organization of APLIC. However, existing structures are consistent with current APLIC recommendations.

Poles

Approximately 18 wood poles and 17 LSTs would be replaced with TSPs. Four wood poles and two light duty steel poles (LDSPs) would not be removed but instead would be topped, with distribution lines remaining on the shortened poles. Approximately 29 TSPs would be installed. Figure 4-6 shows typical pole diagrams. Guy poles are not currently planned as part of the proposed project.

TSPs are self-supported, with a reinforced concrete foundation. The poles would be 60 to 110 feet tall and 2 to 3.5 feet in diameter. Diagrams of TSPs are provided in Figure 2.5-2. Switches, breakers, and structures would be replaced for incoming power lines.

Refer to Figure 4-3 for the locations of the existing 115-kV power lines, their relocated alignments, and pole locations.

Conductor

Single circuit lines would contain three conductors. Double circuit lines would contain two circuits, with three conductors on each circuit. Space between each circuit would be 10 vertical feet and 15 horizontal feet. Conductor types to be used include 2433 AAC, 1113 AAC, 477 ACSS, 397 AAC, and 715 AAC.

4.10.5 Project Construction

Project construction would be completed in five phases:

- **Phase 1:** Substation Site Grading, Access, and Security Fencing
- **Phase 2:** Substation Foundation and Footing
- **Phase 3:** Substation Equipment and Components, Microwave Receiver Installation at Fence Meadow Repeater Station
- **Phase 4a:** Power Line Reconfiguration (install pole foundations)
- **Phase 4b:** Power Line Reconfiguration (install poles)
- **Phase 4c:** Power Line Reconfiguration (string power lines)
- **Phase 4d:** Power Line Reconfiguration (remove pull sites and restore impacted property)
- **Phase 5:** Existing Substation Equipment Removal and Post-Construction Cleanup

These phases would occur sequentially, except that a portion of Phase 3 would overlap with Phase 4.

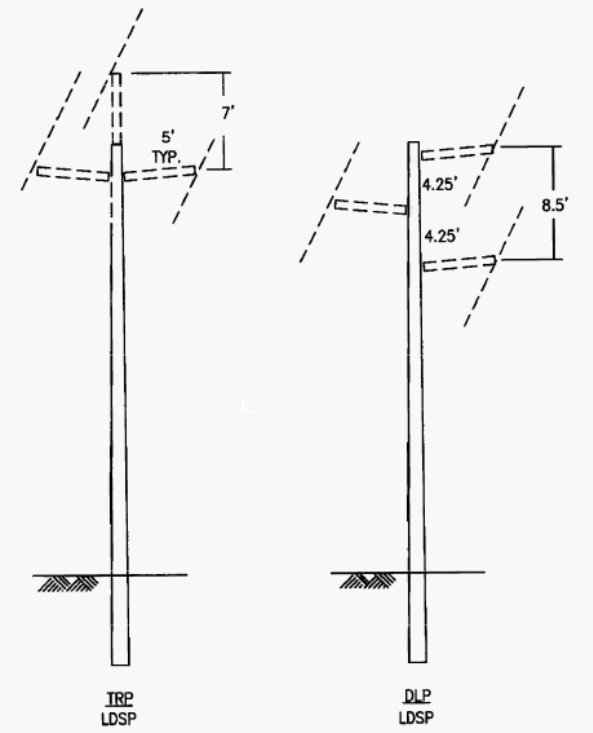

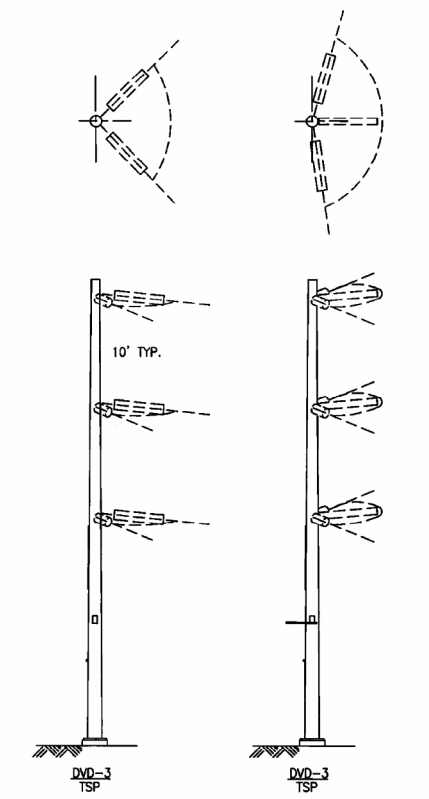

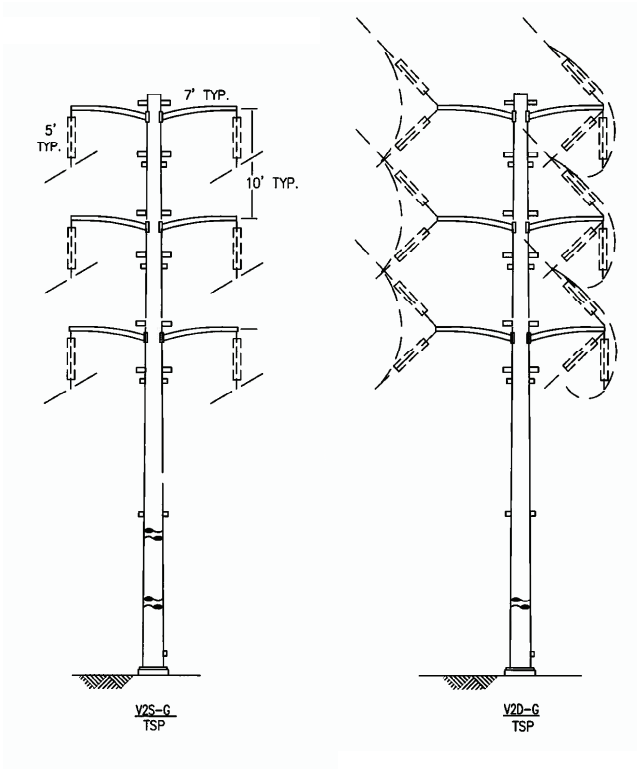

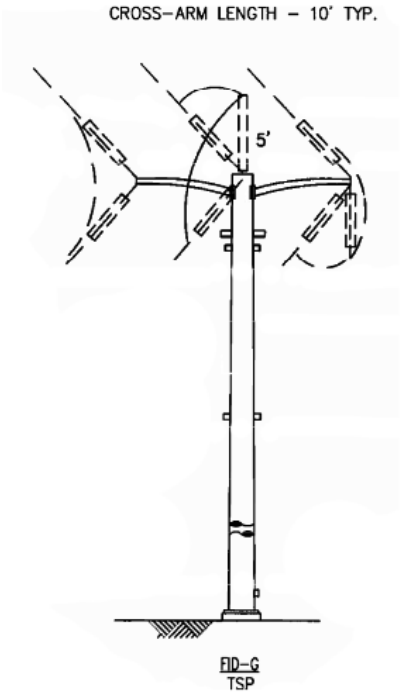

1009376.0001.03.d.ai 12/16/2016

Figure 4-6

Diagram of Typical TSPs

Sanger Substation Expansion Project

Phase 1: Substation Site Grading, Access, and Security Fencing

PG&E would first employ Storm Water Pollution Prevention Plan (SWPPP) best management practices (BMPs), including the use of fiber rolls, silt fence, and mulch around the substation expansion area. Surveyors would place stakes around the access road alignments and areas to be graded. Two 20-foot-wide access roads would be constructed to the expanded substation footprint area from South McCall Avenue, as shown on Figure 4-3, with access provided between the two entry sites within the substation footprint. Trucks would travel one way through the substation site after entering through one driveway and would exit the substation through the other driveway. Up to 10 trucks and 30 worker vehicles may be within the substation site at any given time during construction. Access to the existing substation would be maintained through the existing gate on South McCall Avenue, as shown on Figure 4-3.

Vegetation, including grasses and agricultural crops, would be removed from the expansion area. No tree removal is anticipated in this phase. Trimming of agricultural trees may be needed. Vegetation would be stockpiled in the expanded substation footprint and eventually chipped and mulched on site. Topsoil would be salvaged and stockpiled (for restoration or agricultural use), and then PG&E would grade and compact the substation pad. The expanded substation pad would be adjacent to the existing substation. With the expanded substation being constructed adjacent to the existing substation, the existing substation would remain in service during expansion to avoid electricity service interruptions. Minimal grading of the site would be required due to the area already being quite level.

PG&E anticipates that 3 feet of over-excavation and re-compaction would be required due to recommendations in the Geotechnical Report prepared for the proposed project (Kleinfelder 2015). Some soil may be imported. The anticipated source is located in Sanger, California. A conservative estimate of the amount of soil to be imported is approximately 59,000 cubic yards, based on an overall increase of 2 feet across the site. PG&E would conduct fine grading to implement drainage on the site and would then place surface gravel on the site to stabilize the work area. PG&E would also construct the retention pond in the southwest corner of the site.

After grading, PG&E would install the perimeter security fence and video security system to replace the existing fencing and security system. PG&E would obtain power for construction from the existing Sanger Substation.

Phase 2: Substation Foundation and Footing

The subsurface ground grid and conduit chases would be excavated. The ground grid would be approximately 1.5 feet below finish grade, with conduit duct banks approximately 4 feet below grade. PG&E would excavate an area 4 to 6 feet below grade for slab foundations, then pour concrete footings and foundations for substation aboveground components. The foundation for the microwave tower would also be constructed. The foundation would either be a reinforced slab foundation or a drilled pier foundation. For a reinforced slab foundation, PG&E would excavate the foundation area, then build a reinforced steel cage for the foundation. Concrete would then be poured. For a drilled pier foundation, PG&E would bore a hole with a boring machine, pour slurry into the hole, and then install a reinforced steel column with a crane. PG&E would install ground wells and pull boxes.

Phase 3: Substation Equipment and Components, Microwave Receiver Installation at Fence Meadow Repeater Station

PG&E would construct building foundations, bus work structures, dead-end switch structures, circuit breakers, MPAC buildings, and control system hardware once the concrete foundations have cured. Equipment would be secured by bolting or welding to foundation slabs and footings. Metallic structures would be connected to the substation's grounding grid. PG&E would install the microwave telecommunications tower on its foundation, using a crane, during this phase.

Gravel would be placed on all unpaved portions of the substation site. Gravel would be compacted where equipment access is needed during operations and maintenance. PG&E would test and commission equipment and place it into service; this would be done in parallel with work during Phase 4.

During Phase 3, PG&E would install two dishes, each measuring about 4 feet in diameter, on an existing tower at the Fence Meadow Repeater Station. Installation would take approximately one week with a 3-person construction crew. No ground disturbance would occur. Construction equipment would include one crane as well as up to two utility trucks with equipment. Construction workers would access the site from State Route 168, from which they would take Dinkey Creek Road to Ross Crossing Road, which leads to the Fence Meadow Repeater Station.

Phase 4: Power Line Reconfiguration

Phase 4 would consist of four sub-phases: (4a) install pole foundations, (4b) install poles, (4c) string power lines, and (4d) remove pull sites and restore impacted property. Work in Phase 4 would be performed in parallel with work in Phase 3.

Phase 4a: Power Line Access and Work Area Preparation

Vegetation, such as agricultural crops and grasses, would be removed from work areas and access road areas. Up to 50 agricultural trees may be removed for this phase. A backhoe would likely be used to remove vegetation, including trees.

Access to power line work areas would be from South McCall Avenue, East Jensen Avenue, and Thompson Road. All new pole locations would be accessed utilizing a combination of existing access roads and cross country access routes. No grading would be needed for cross-country access routes. Preliminary locations for access roads and work areas are shown on Figure 4-3.

PG&E would establish work areas around existing poles and in new locations by removing vegetation. Work areas around LSTs would be approximately 0.08 acres. Work areas to remove wood poles would be about 0.2 acres. SWPPP BMPs would be implemented at the pole work areas.

Shoo-Fly Installation

Shoo-fly lines could be used during foundation installation where possible safety conflicts exist with equipment. A shoo-fly line is a line used for temporary power service while construction work is completed. Wooden poles would be installed, and conductor from the 115-kV power lines leading to Sanger Substation would be transferred from existing wood poles and LSTs onto the shoo-fly poles. Conductor would then be transferred from existing LSTs and wood poles.

Foundation Installation

Tubular Steel Poles. Concrete foundations would be poured for TSPs. PG&E would bore a foundation hole measuring 4.5 to 7 feet in diameter and 15 to 30 feet deep. Reinforcing steel would be placed in the excavation and secured to a bolt assembly plate. A prefabricated concrete form would be placed in the excavated hole, and concrete would be poured into the form. The excavated area around the concrete form would be backfilled with excavated or imported soil. The concrete foundation would be 1 to 2 feet above ground level after backfilling.

Phase 4b: Install Tubular Steel Poles

Pole Installation

Poles would be delivered to the site by flatbed trucks to be installed once foundations are constructed and holes are augered.

Tubular Steel Poles. The TSP itself would be installed in two to three sections. The base section would be lifted with a crane and bolted onto the foundation. The remaining sections would be placed by crane. Arms and insulators on the top TSP section would be placed prior to TSP assembly.

Lattice Steel Tower Demolition and Wood Pole Removal

Conductor would be removed from the existing 115-kV power line structures. Lines would be de-energized, and then the conductor would be cut into pieces, removed, and recycled. Guard structures may be used to prevent conductor from falling onto roadways. LSTs and wood poles that conflict with line re-routes would be removed. LSTs would be unbolted in sections. The sections would then be lifted with a crane onto a work area for further dismantling. LST material would be recycled. Concrete foundations under LSTs would be excavated to approximately 6 feet below the ground surface using a backhoe or air compressor powered hand tools. Foundation material below 6 feet below the ground surface would be left in place. The excavation would be filled with material from the site (e.g., from excavating new TSP foundations) or imported soil. To remove wood poles, workers would use a bucket truck to first remove cross arms and wires. Then a boom truck would be used to loosen the poles and extricate them from the ground. Wood poles would be disposed of at an environmental disposal site or salvaged for future use.

Distribution Modification

Four wood poles and two LDSPs would be topped and would retain the distribution line while the power line is moved onto new structures. To top poles, a line truck and aerial lift would be used to access the pole. A chainsaw would be used to cut the top off of the poles 1 foot above where the distribution line is attached to the pole. Removed portions of poles would be disposed of at an environmental disposal site.

Guard Structure Installation

Clearance structures (also called guard structures) would be used when stringing over East Jensen Avenue and South McCall Avenue, and non-energized 12-kV lines would be used to prevent the 115-kV lines and sock lines from falling onto roads and 12-kV lines. No energized electric lines would be crossed. Clearance structures would be H- or Y-frame structures and would be installed directly into the ground to a depth of 6 to 10 feet. Structures would be placed on one or either side of the infrastructure to be crossed. Netting may be placed between the structures, spanning the road or 12-kV line. Traffic control would be used as needed during installation of the clearance structures.

Pull and Tension Site Preparation

Up to eight pull and tension sites would be established, as shown in Figure 4-3. Vegetation and trees would be removed with a backhoe to prep the sites. No compaction of soil would be needed.

Phase 4c: String Power Lines

Conductor Stringing

Conductor stringing would be completed using pull and tensioning equipment. Sheaves (rollers) would be used to facilitate pulling conductor through each structure and would be attached to the transmission structure cross arm. Pull and tensioning equipment would be positioned in the pulling/tensioning areas. Sock line (rope) would be installed at the pull and tensioning equipment, attached to the conductor, then

pulled tight through the sheaves. Conductor sags between structures would be adjusted to a specified height (at least 29 feet) above the ground surface. Conductor would then be clamped to hardware on each insulator to keep the conductor in place. Sheaves would be removed, and additional minor equipment, such as vibration dampers, would be installed on structures. The line would then be connected and tested.

Tower and Wood Pole Removal

LSTs and wood poles not removed in Phase 4b would be removed using the same method described for Phase 4b.

Guard Structure and Shoo-Fly Removal

Guard structures and shoo-flies would be removed after stringing and testing. The holes would be backfilled. Traffic control would be used as needed during removal of the clearance structures.

Phase 4d: Remove Pull Sites and Restore Impacted Property

Once overland routes have been used, they would be restored to approximately pre-project conditions. LST foundation piers would be removed. Pull sites would be restored. Work sites around removed poles and LSTs would be restored. Base rock material would be salvaged and provided to the landowner, if requested.

Phase 5: Existing Substation Equipment Removal and Post-Construction Cleanup

Existing Sanger Substation Area

Unneeded structures and materials (e.g., towers, poles, and conductor removed as part of the project) would be disposed of or recycled. Transmission equipment, bus work, and structures would be removed. Five of the existing SF_6 circuit breakers would be retained in PG&E's surplus inventory. The remaining three SF_6 circuit breakers would be scrapped, with any spare parts in good condition retained as part of PG&E's surplus inventory. Connections would be reconfigured to take the relocated 115-kV power lines. Existing control building structures and foundations would be removed. The site would be restored and graded as needed.

Expanded Substation Area

The permanent access roads would be covered with base rock, then paved with asphalt. Grading would be done to match the original contours. Access roads for power line reconfiguration would be restored. Connections would be reconfigured to accept the relocated 115-kV infrastructure. SWPPP BMP structures would be removed.

Construction Staging and Soil Stockpile

Parking, material lay down, and construction staging would be within the boundaries of the expanded substation. The staging area would likely move within the constraint area during construction but would not extend beyond the boundary of the expanded substation area. Soil would also be stockpiled within the expanded substation site and may move within the constraint area throughout construction.

Water Use

During construction, water would be used for soil compaction and dust control. The average water use would be 1,500 gallons per day, with the total maximum water usage totaling 1 million gallons of water. Water could be obtained from the City of Sanger, the City of Fowler, or from Sunnyside Farms (which would be located adjacent to the substation expansion area). The City of Fowler and City of Sanger have hydrant meters from which PG&E could fill water trucks and then transport to the project site.

Concrete Import

About 1,420 cubic yards of concrete would be imported for building and structure foundations.

Construction Equipment

Construction equipment used for the proposed project as well as its use is provided in Table 4-2.

Table 4-2 Construction Equipment Used for the Proposed Project by Phase

Phase	Equipment to be Used	
Phase 1	• D5 bulldozer • Compactor • Road roller • Water truck • Skid-steer bobcat • Dump trucks (10) • Mechanic truck • Backhoe	• Track mounted backhoe • Fuel truck • ½-ton pickup truck (2) • ¾-ton pickup truck • ¾- to 1-ton crew cab truck • Road grader, 6-wheel • Elevating scraper
Phase 2	• ½-ton pickup truck • ¾-ton pickup truck • Skid steer bobcat • Skid loader • Water truck • Fork lift • 2-ton flatbed trucks • Dump truck (5- to 10-ton) • Air tamper	• Mini excavator • Air compressor • Drill rig (self-propelled, 5 ton) • Construction truck and trailer (2- to 60-ton) • Track mounted backhoe • Concrete trucks (2)
Phase 3	• ½-ton pickup truck • ¾-ton pickup truck • Skid steer bobcat • Water truck • Fork lift • 2-ton flatbed truck	• Air compressor • Man lift • Boom truck • Semi-tractor trailer • Rigging truck
Phase 4a (in parallel with Phase 3)	• ½-ton pickup truck • ¾-ton pickup truck • Skid loader • Water truck	• Crane (15- to 80-ton) • Concrete trucks • Crawler mounted auger • Dump trucks (4)
Phase 4b (in parallel with Phase 3)	• D5 bulldozer • Compactor • Road roller • Water trucks • Skid-steer bobcat • Mechanic truck	• Fuel truck • ½-ton pickup trucks (2) • ¾-ton pickup truck • ¾- to 1-ton crew cab truck • Road grader, 6-wheel • Elevating scraper • Aerial lift trucks

Table 4-2 Construction Equipment Used for the Proposed Project by Phase

Phase	Equipment to be Used	
Phase 4c (in parallel with Phase 3)	• ½-ton pickup trucks (2) • ¾-ton pickup truck • Puller • Tensioner • Aerial lift truck	• Crane (15- to 80-ton) • Semi-tractor trailer • Boom truck • Fork lift
Phase 4d (in parallel with Phase 3)	• ½-ton pickup trucks (2) • ¾-ton pickup truck • Skid loader • Water truck	• Dump trucks (2) • Mini excavator • Track mounted backhoe • Hydraulic excavator
Phase 5	• ½-ton pickup trucks (2) • ¾-ton pickup truck • Skid loader • Water truck • Dump trucks (4) • Mini excavator • Track mounted backhoe • Hydraulic excavator • Road grader, 6-wheel	• Elevating scraper • D5 bulldozer • Compactor • Road roller • Paver • Skid steer bobcat • Fork lift • Boom truck • Air compressor

Source: PG&E 2015.

Helicopters would not be used for any phase of construction.

Road Closures

Partial lane closure would likely be required for East Jensen Avenue and South McCall Avenue during certain activities. Only one direction of travel would be closed at any given time. On Jensen Avenue, at least one lane in each direction would be open at all time, since the road has two lanes in each direction. There would be no complete road closures.

Project Schedule and Workforce

Construction is anticipated to begin as early as fall of 2017. Construction would take about 24 to 30 months. The upgraded Sanger Substation would be in service in December of 2019, and the project completed by April 2020. A schedule by phase is provided in Table 4-3.

Table 4-3 Proposed Project Schedule by Phase

Phase	Duration
Phase 1: Substation Site Grading, Access, and Security Fencing	6 months
Phase 2: Substation Foundation and Footing	3 months
Phase 3: Substation Equipment and Components	12 months[(1)]
Phase 4: Power Line Reconfiguration	
Phase 5: Existing Substation Equipment Removal and Post-Construction Cleanup	3 months
Total (minimum)	24 months

Source: PG&E 2015.
Note:
(1) Phase 4 would occur at the same time as Phase 3 and would take about 6 months.

Up to 30 construction workers could be present on the site at any given time throughout construction of the project. Construction workers would park on the project site. Night-time work likely would not be required. If required, work would be limited to testing and line work. No grading or other noise-producing equipment is expected to be required at night.

4.10.6 Project Operation and Maintenance

System Monitoring and Control

Sanger Substation would not be staffed. The expanded Sanger Substation would be operated from PG&E's Grid Control Center in Vacaville, California. A dedicated phone line would connect the substation and the control center to transmit station and line alarms.

Maintenance

As is true for the existing substation, maintenance and alarm responses would be staffed through PG&E's local maintenance center. All maintenance of the substation would occur within the substation site and access roads. Tree trimming is not anticipated during project operation. Future maintenance activities are expected to be generally the same as what is occurring at the existing Sanger Substation.

Facility Inspection

Inspection of power lines would be conducted in the same manner as inspections of the existing power lines. Power line inspection is conducted annually by ground or with a flyover. The substation would be inspected monthly or as needed for emergencies. Staff would park within the substation fence line.

Water Use

The expanded substation would not require water during operations.

4.10.7 Ground Disturbance

Table 4-4 summarizes temporary and permanent ground disturbance associated with proposed project components.

Table 4-4 Conventional Method Land Disturbance Estimates

Component	Acres Disturbed During Construction	Acres Restored	Acres Permanently Disturbed
Substation Expansion			
Driveways	0.1	--	0.1
Expanded Substation Area	7.06	0	7.06
Transmission Line Reconfiguration			
New Poles	3.87	3.85	0.02
Removed Poles	2.34	2.34	0
Removed Towers	0.3	0.3	0
Pull and Tension Sites	2.6	2.6	0
Existing Access Roads[a]	--	--	--
Temporary Access Roads	12.71	12.71	0
Total disturbance[b]	28.98	21.8	7.18

Source: PG&E 2015.
Notes:

[a] Existing access roads are already disturbed and are not included in acreage totals. About 3.85 acres of existing roadway would be used for the proposed project.
[b] Total values are rounded to the nearest tenth.

4.10.8 Right-of-Way Acquisition

Substation Expansion

PG&E intends to acquire the land necessary for the substation expansion.

Power Line Reconfiguration

PG&E intends to acquire right-of-way (ROW) for the reconfigured power line. PG&E would negotiate with property owners to move the existing easements to the new routes. The new ROW would range from 40 to 150 feet in width.

4.11 Applicant Proposed Measures

PG&E proposed applicant proposed measures (APMs) in its September 2015 PEA, as listed in Table 4-5. PG&E proposes to implement the APMs during implementation of the proposed project to reduce or avoid environmental impacts. Table 4-5 lists the APMs; APM CUL-2 has been removed because it was found to be in conflict with procedures outlined in the Mitigation Monitoring and Reporting Plan (MMRP) for authorization of work areas outside of areas studied in this IS/MND.

Table 4-5 Applicant Proposed Measures

APM	Description
Aesthetics	
APM AES-1	Construction site. Construction activities will be kept as clean and inconspicuous as practical. Where practical, construction storage and staging will be screened from close-range residential views.
APM AES-2	New source of substantial light or glare avoidance. Security lighting at the substation will be directed on-site and will be hooded to reduce potential visibility from off-site locations.
APM AES-3	Structures and equipment at the expanded substation will be a non-reflective finish and neutral gray color.
Agriculture and Forestry Resources	
APM AGR-1	Agriculture impacts avoidance and compensation. To avoid potential impacts on agriculture, PG&E will work with farmers to conduct its work between their harvest and planting periods where and whenever possible. In areas containing crops that must be removed and replaced to gain access to pole sites for construction purposes, PG&E will provide compensation to farmers and/or landowners in accordance with PG&E's Property Damage Settlement Guidelines, including compensation to replace the removed crops. Within 6 months of completion of project construction, PG&E shall also repair, replace or provide compensation for damage to fences, irrigation facilities and other such agricultural infrastructure. Access across active crop areas will be negotiated with the farmers and/ or owners in advance of any construction activities.
Air Quality	
APM AIR-1	Fugitive dust emissions minimization. Pursuant to SJVAPCD Regulation VIII, a Dust Control Plan will be prepared and submitted to SJVAPCD for approval within the required timeframe prior to commencing construction activities. Based on the SJVAPCD Guidance for Assessing and Mitigating Air Quality Impacts (SJVAPCD 2015b), the following are examples of fugitive dust control measures that may be included in the Dust Control Plan to minimize dust emissions: • Apply water to unpaved surfaces and areas. • Use non-toxic chemical or organic dust suppressants on unpaved roads and traffic areas. • Limit or reduce vehicle speed on unpaved roads and traffic areas. • Maintain areas in a stabilized condition by restricting vehicle access. • Install wind barriers. • During high winds, cease outdoor activities that disturb the soil. • Keep bulk materials sufficiently wet when handling. • Store and handle loose materials that could create dust in a three-sided structure. • When storing bulk materials, apply water to the surface or cover the storage pile with a tarp.

Table 4-5 Applicant Proposed Measures

APM	Description
	• Don't overload haul trucks. Overloaded trucks are likely to spill bulk materials. • Cover haul trucks with a tarp or other suitable cover. Or, wet the top of the load enough to limit visible dust emissions. • Clean the interior of cargo compartments on emptied haul trucks prior to leaving a site. • Prevent trackout by installing a trackout control device. • Clean up trackout at least once a day. If along a busy road or highway, clean up trackout immediately. • Monitor dust-generating activities and implement appropriate measures for maximum dust control.
Biological Resources	
APM BIO-1	Work area minimization. The number of access routes, staging areas, and total area of the work sites will be kept to the minimum necessary.
APM BIO-2	Erosion and sediment control measures. A Stormwater Pollution Prevention Plan (SWPPP) will be implemented to ensure effective erosion and sediment control measures will be in place at all times during construction.
APM BIO-3	Weed management. To prevent the spread of noxious weeds, only equipment which has been washed and is free of caked on mud, dirt, and other debris, which could house plant seeds, will be allowed in the project area.
APM BIO-4	Avoidance of impacts to wildlife and natural habitats. All work will be done in a manner that minimizes disturbance to wildlife and habitat.
APM BIO-5	Litter and trash management. All food waste and associated containers will be disposed of in closed lid containers.
APM BIO-6	Maintenance and refueling. No vehicle maintenance or refueling will occur within 100 feet of the agricultural irrigation ditch located near the north boundary of the project footprint.
APM BIO-7	Spill prevention and cleanup. Proper spill prevention and cleanup equipment will be readily available.
APM BIO-8	Route limitations. Vehicles will remain on designated access roads and within designated worksites.
APM BIO-9	Pets and firearms. No pets or firearms are permitted within the project area.
APM BIO-10	Vehicle speed limits. Construction crews will abide all County road speed limits.
APM BIO-11	Backfilling. Prior to backfilling or placement of structures, all excavation sites (e.g., holes excavated for pole butts, trenches, etc.) will be inspected to ensure no small vertebrates have been entrapped. All excavations with a potential for entrapment of wildlife will be backfilled or fully covered at the end of the work day. Alternatively, holes or trenches will include one or more escape ramps constructed of earth fill or wooden planks no less than 10 inches wide and reaching to bottom of trench at the close of each working day.
APM BIO-12	Avoidance and minimization of potential impacts on Swainson's hawk. If construction activities are scheduled to occur during the nesting season (February 1 to August 31), a preconstruction survey for nesting Swainson's hawk will be conducted within 0.5 mile of the project area by a qualified biologist. If active nests are found, a qualified biologist will designate an appropriate buffer between construction activities and the nest to avoid disturbance to the nesting. Work within the buffer will not proceed until the nestlings have fledged or the nest becomes inactive.
APM BIO-13	Avoidance and minimization of potential impacts on burrowing owl. Within 30 days of beginning ground-disturbing activities, a preconstruction survey for burrowing owl will be conducted along the agricultural irrigation ditch and any other suitable habitat within 500 feet of the project area by a qualified biologist. If no burrowing owls are detected no further measures are required. If burrowing owls are detected, no construction activities will occur within 250 feet of occupied burrows during the nesting season or within 160 feet of occupied burrows during the non-nesting season. For the purposes of this measure, the nesting season is February 1st to August 31st. Additionally, the burrowing owls will be monitored by a qualified biologist during construction to assess the sensitivity of the burrowing owls to the construction activities. The size of the avoidance buffer may be increased or decreased as determined by the monitoring biologist based on the planned construction activities and the sensitivity of the burrowing owls. If impacts on an active burrow cannot be avoided, passive relocation may be considered. Relocation will be conducted during the nonnesting season and only after a site-specific plan has been developed and implemented in coordination with the CDFW.

Table 4-5 Applicant Proposed Measures

APM	Description
APM BIO-14	Avoidance and minimization of potential impacts on nesting birds. If work is scheduled to occur during the avian nesting season (February 1st through August 31st), active work areas will be surveyed by a qualified biologist within 15 days before work begins to determine if any nesting birds are present. Exclusionary buffer zones will be established by a qualified biologist around any active nests within the project area. The size of the buffer zone will be established at the discretion of the biologist based on the following factors: 1) the species' sensitivity to disturbance, 2) the topography surrounding the nest site, and 3) its concealment from project activities. If construction activities are required within an exclusionary buffer zone, the nest will be monitored for disturbance by a qualified biologist until the young have fledged and are independent of the adults. Nest disturbance will be assessed based on behavioral cues such as time off the nest, hesitation approaching the nest, incessant chattering and bill swiping, and other indications. If no nest disturbance is observed, work may continue. If the biologist determines that construction activities are causing nest disturbance, work will not be allowed to continue within the buffer zone until the nest becomes inactive or the young have fledged.
Cultural Resources	
APM CUL-1	Development and implementation of a worker environmental awareness program. PG&E will design and implement a Worker Education Program that will be provided to all project personnel who may encounter and/or alter historical resources or unique archaeological properties, including construction supervisors and field personnel. No construction worker will be involved in field operations without having participated in the Worker Education Program. The Worker Education Program will include, at a minimum: • A review of archaeology, history, prehistory and Native American cultures associated with historical resources in the project vicinity; • A review of applicable local, state and federal ordinances, laws and regulations pertaining to historic preservation; • A discussion of procedures to be followed in the event that unanticipated cultural resources are discovered during implementation of the project; • A discussion of disciplinary and other actions that could be taken against persons violating historic preservation laws and PG&E policies; and • A statement by the construction company or applicable employer agreeing to abide by the Worker Education Program, PG&E policies and other applicable laws and regulations. The Worker Education Program may be conducted in concert with other environmental or safety awareness and education programs for the project, provided that the program elements pertaining to cultural resources are provided by a qualified instructor meeting applicable professional qualifications standards.
APM CUL-2	Rescinded by PG&E.
APM CUL-3	Unanticipated discovery of potentially significant prehistoric and historic resources. In the unlikely event that previously unidentified cultural resources are uncovered during implementation of the project, all work within 100 feet (30 meters) of the discovery will be halted and redirected to another location. PG&E's cultural resources specialist or his/her designated representative will inspect the discovery and determine whether further investigation is required. If the discovery can be avoided, and no further impacts will occur, the resource will be documented on State of California Department of Parks and Recreation cultural resource records, and no further effort will be required.
APM CUL-4	Unanticipated discovery of human remains management. If human remains are discovered, work in the immediate vicinity will stop immediately and a PG&E Cultural Resources Specialist will be contacted. The location of the discovery will be secured to prevent further impacts and the location will be kept confidential. The Cultural Resources Specialist will evaluate the discovery and will contact the Fresno County Coroner upon verifying that the remains are human. If the coroner determines the remains are Native American, the Native American Heritage Commission will be contacted and the remains will be left in situ and protected until a decision is made on their final disposition.
APM PAL-1	Worker's environmental resources training. All construction crew members must receive a paleontologically focused worker's environmental awareness training module prior to ground disturbance activities for the project. The module will be developed by the lead Paleontologist for the project and can

Table 4-5 Applicant Proposed Measures

APM	Description
	be presented in person, through a safety tailboard, or in some other format, such as a brochure or videotape. The training module will cover the following topics: fossil/paleontological resource identification, discovery guidance, and the contact information of both the paleontological field monitor and the project paleontological resource specialist.
APM PAL-2	Unanticipated discovery plan. In the event that paleontological resources are discovered during construction activities, several procedures must be adhered to. All work must stop within 100 feet of the discovery and the appropriate PG&E Cultural Resources Specialist (CRS) must be contacted at the time of discovery. Avoid any impacts to the site, which includes looting, or any other damage to the resource. Work cannot continue within 100 feet of the resource without approval from the PG&E CRS. The PG&E CRS will coordinate with the lead project Paleontologist in order to protect the resource and evaluate its significance. If the resource is determined significant, the PG&E CRS and Paleontologist will develop a plan to evaluate the resource. The plan may include protection and preservation of the resource, additional documentation, and/or subsurface testing.
APM PAL-3	Paleontological monitoring. A qualified professional paleontologist must prepare a Paleontological Resources Monitoring and Mitigation Plan for the project before the onset of ground disturbance activities for the project. Monitoring will consist of spot-checking all ground disturbance activity in undisturbed soils 10 feet below the surface until such time that a paleontological resource is discovered. Monitoring will not be required for soils at a depth of less than 10 feet. Monitoring can be reduced or discontinued in areas of high sensitivity only if 50% of the ground disturbing work within the Riverbank Formation has been completed and no resources have been identified. Ground disturbing work to be monitored if it occurs 10 feet below the surface includes all excavation and grading for the substation, retention basin, and road, as well as any augering that utilizes an auger greater than 5 feet in diameter. The extent and duration of spot-checking will be determined by the PG&E CRS and the lead paleontologist for the project. If a paleontological resource is identified during ground disturbance activities, monitoring will transition from spot-checking to full-time monitoring. In the event of a discovery, the monitor can direct the construction crew so that the resource is avoided and can be properly assessed.
Geology and Soils, Hydrology and Water Quality	
APM GEO-1	Geotechnical evaluation and soils report. A geotechnical evaluation and soils report has been prepared for PG&E. The report concluded that the substation site is geotechnically suitable for construction of the proposed improvements using conventional grading, shallow and deep foundation systems. A copy of the report will be provided separately to CPUC staff.
APM GEO-2/ APM WQ-1	Development and implementation of a Stormwater Pollution Prevention Plan (SWPPP). Because the project involves more than an acre of soil disturbance, a SWPPP will be prepared for the project as required by the state National Pollutant Discharge Elimination System (NPDES) General Permit for Discharges of Stormwater Associated with Construction Activity. This plan will be prepared in accordance with the Water Board guidelines and other applicable erosion and sediment control Best Management Practices (BMPs). Implementation of the plan will help stabilize disturbed areas and will reduce erosion and sedimentation. The SWPPP will designate BMPs that will be followed during and after construction of the project. Examples of erosion-minimizing measures that may be identified in the SWPPP include: • Using drainage control structures (e.g., straw wattles or silt fencing) to direct surface runoff away from disturbed areas. • Strictly controlling vehicular traffic. • Implementing a dust-control program during construction. • Restricting access to sensitive areas. • Using vehicle mats in wet areas. • Revegetating disturbed areas, where applicable, following construction. In areas where soils are to be temporarily stockpiled, soils will be placed in a controlled area and will be managed with similar erosion control techniques. Where construction activities occur near a surface waterbody or drainage channel and drainage from these areas flows towards a waterbody or wetland, stockpiles will be placed at least 100 feet from the waterbody or will be properly contained (such as berming or covering to minimize risk of sediment transport to the drainage). Mulching or other suitable

Table 4-5 Applicant Proposed Measures

APM	Description
	stabilization measures will be used to protect exposed areas during and after construction activities. Erosion-control measures will be installed, as necessary, before any clearing during the wet season and before the onset of winter rains. Temporary measures, such as silt fences or wattles intended to minimize erosion from temporarily disturbed areas, will remain in place until disturbed areas have stabilized. The SWPPP will be designed specifically for the hydrologic setting of the project.
Greenhouse Gases	
APM GHG-1	Minimize GHG emissions. • Minimize unnecessary construction vehicle idling time. The ability to limit construction vehicle idling time will depend on the sequence of construction activities and when and where vehicles are needed or staged. Certain vehicles, such as large diesel-powered vehicles, have extended warm-up times following start-up that limit their availability for use following start-up. Where such diesel-powered vehicles are required for repetitive construction tasks, these vehicles may require more idling time. The project will apply a "common sense" approach to vehicle use, so that idling is reduced as far as possible below the maximum of 5 consecutive minutes allowed by California law; if a vehicle is not required for use immediately or continuously for construction activities, its engine will be shut off. Construction foremen will include briefings to crews on vehicle use as part of pre-construction conferences. Those briefings will include discussion of a "common sense" approach to vehicle use. • Maintain construction equipment in proper working conditions in accordance with PG&E standards. • Minimize construction equipment exhaust by using low-emission or electric construction equipment where feasible. Portable diesel fueled construction equipment with engines 50 hp or larger and manufactured in 2000 or later will be registered under the CARB Statewide Portable Equipment Registration Program. • Minimize welding and cutting by using compression of mechanical applications where practical and within standards. • Encourage use of natural gas powered vehicles for passenger cars and light-duty trucks where feasible and available. • Encourage the recycling of construction waste where feasible.
APM GHG-2	Minimize sulfur hexafluoride (SF_6) emissions. To avoid and minimize fugitive (leakage) SF_6 emissions, PG&E will incorporate the following measures: • Incorporate Sanger Substation into PG&E's system-wide SF_6 emission reduction program. CARB has adopted the Regulation for Reducing Sulfur Hexafluoride Emissions from Gas Insulated Switchgear sections 95350 to 95359, title 17, California Code of Regulations, which requires that company-wide SF_6 emission rate not exceed 1 percent by 2020. Since 1998, PG&E has implemented a programmatic plan to inventory, track, and recycle SF_6 inputs, and inventory and monitor system-wide SF_6 leakage rates to facilitate timely replacement of leaking breakers. PG&E has improved its leak detection procedures and increased awareness of SF_6 issues within the company. X-ray technology is now used to inspect internal circuit breaker components to eliminate dismantling of breakers, reducing SF_6 handling and accidental releases. As an active member of USEPA SF_6 Emission Reduction Partnership for Electrical Power Systems, PG&E has focused on reducing SF_6 emissions from its transmission and distribution operations and has reduced the SF_6 leak rate by 89 percent and absolute SF_6 emissions by 83 percent. • Require that the breakers at Sanger Substation have a manufacturer's guaranteed maximum leakage rate of 0.5 percent per year or less for SF_6. • Maintain substation breakers in accordance with PG&E's maintenance standards. • Comply with California Air Resources Board Early Action Measures as these policies become effective.

Table 4-5 Applicant Proposed Measures

APM	Description
Hazards and Hazardous Materials	
APM HAZ-1	Spill Prevention, Control, and Countermeasures (SPCC). In the event of an accidental spill, the substation is equipped with a retention basin that meets SPCC Guidelines (40 CFR 112). The retention basin will be sufficiently sized to accommodate the accidental spill of all mineral oil from the largest transformer located at the substation. The substation will also be equipped with lead-acid batteries to provide backup power for monitoring, alarm, protective relaying, instrumentation and control, and emergency lighting during power outages. Containment will be constructed around and under the battery racks, and the SPCC will address containment from a battery leak. A site-specific SPCC Plan will be prepared prior to the initiation of construction.
APM HAZ-2	Emergency spill response equipment and training. Emergency spill response and clean up kits will be available onsite as well as at the Fresno PG&E Service Yard Headquarters, and readily available for the cleanup of an accidental spill at the substation. Construction crews will be trained in safe handling and cleanup responsibilities prior to the initiation of construction.
APM HAZ-3	Shock hazard. All authorized personnel working on site, during either construction or maintenance and operation, will be trained according to PG&E standards. To minimize potential exposure of the public to electric shock hazards, an 8-foot-tall chain link fence topped with 1 foot of barbed wire will extend around the perimeter of the expanded substation for a total of approximately 9 feet, thus restricting site access. Warning signs will be posted to alert persons of potential electrical hazards. All electric power lines will be designed in accordance with CPUC General Order 95 Guidelines for safe ground clearances established to protect the public from electric shock.
APM HAZ-4	Soil testing and disposal. In the event that soils suspected of being contaminated (on the basis of visual, olfactory, or other evidence) are removed during site grading activities or excavation activities, the excavated soil will be tested, and if contaminated above hazardous waste levels, will be contained and disposed of at a licensed waste facility. The presence of known or suspected contaminated soil will require testing and investigation procedures to be supervised by a qualified person, as appropriate, to meet state and federal regulations.
Noise	
APM NOI-1	Construction schedule limits. PG&E will limit construction hours so that construction will not occur before 6:00 a.m. or after 9:00 p.m. on any day except Saturday or Sunday, when construction will not occur before 7:00 a.m. or after 5:00 p.m. If nighttime work is needed because of clearance restrictions on the power line, PG&E will take appropriate measures to minimize disturbance to local residents, including contacting nearby residences to inform them of the work schedule and probable inconveniences.
APM NOI-2	Construction equipment noise reduction devices and low noise equipment. PG&E shall include noise control requirements in specifications provided to construction contractors. Such contract specifications would include, but not be limited to, performing all work in a manner that minimizes noise; use of equipment with effective mufflers; use of "quiet" equipment (i.e., equipment that incorporates noise control elements into the design—compressors have "quiet" models) whenever possible; using equipment that is specifically designed for low noise emissions and equipment powered by electric or natural gas as opposed to diesel or gasoline; and undertaking the most noisy activities during the daytime to minimize disturbance to surrounding residents.
APM NOI-3	Placement of stationary construction equipment. Stationary equipment used during construction will be located at a minimum distance of 200 feet from sensitive noise receptors.
APM NOI-4 (See APM GHG-1)	Minimization of unnecessary engine idling. Unnecessary engine idling will be limited.
APM NOI-5	Merged with APM NOI-2 by PG&E.
APM NOI-6	Noise disruption minimization through residential notification. Residents in areas of heavy construction noise will be notified prior to commencing construction activities. Notification will include written notice and the posting of signs in appropriate locations with a contact number that residents can call with questions and concerns.

Table 4-5 Applicant Proposed Measures

APM	Description
Transportation	
APM TRAN-1	Traffic Planning. PG&E will follow its standard safety practices as needed, including installing appropriate barriers between work zones and transportation facilities, posting adequate signs, and using proper construction techniques. PG&E is a member of the California Joint Utility Traffic Control Committee, which published the Work Area Protection and Traffic Control Manual (California Joint Utility Traffic Control Committee 1999). PG&E will follow the recommendations in this manual regarding basic standards for the safe movement of traffic on highways and streets in accordance with Section 21400 of the California Vehicle Code. If required for obtaining a local encroachment permit, PG&E will establish a Traffic Management Plan (TMP) to address haul routes, timing of heavy equipment and building material deliveries, potential street and/or lane closures, signing, lighting, and traffic control device placement. Construction activities will be coordinated with local law enforcement and fire protection agencies. Emergency service providers will be notified as required by the local permit of the timing, location, and duration of construction activities.

Source: PG&E 2015.

Key:

BMP	Best Management Practice
CARB	California Air Resources Board
CDFW	California Department of Fish and Wildlife
CFR	Code of Federal Regulations
CPUC	California Public Utilities Commission
CRS	Cultural Resources Specialist
GHG	greenhouse gas
hp	horsepower
NPDES	National Pollutant Discharge Elimination System
PEA	Proponent's Environmental Assessment
PG&E	Pacific Gas and Electric
SF_6	sulfur hexafluoride
SJVAPCD	San Joaquin Valley Air Pollution Control District
SPCC	Spill Prevention Control and Countermeasures
SWPPP	Storm Water Pollution Prevention Plan
TMP	Traffic Management Plan
USEPA	United States Environmental Protection Agency

4.12 Electric and Magnetic Fields Summary

Electromagnetic fields (EMFs) occur both naturally and as a result of human activity across a broad electrical spectrum. Naturally occurring EMFs are caused by the weather and the earth's geomagnetic field. The fields caused by human activity result from technological application of the electromagnetic spectrum for uses such as communications, appliances, and the generation, transmission, and local distribution of electricity.

After several decades of study regarding potential public health and safety risks associated with EMFs from power lines, research results remain inconclusive. In 1993, the CPUC implemented decision D.93 11-013, which requires utilities to use "low-cost or no-cost" EMF reduction measures for EMFs associated with electrical facilities requiring certification under CPUC General Order 131-D. The decision directed utilities to use a 4 percent benchmark for low-cost measures. The applicant included a Field Management Plan Checklist for substation projects as part of its application for the proposed project that describes the no-cost and low-cost EMF reduction measures that would be part of the proposed project. Those measures include:

- Keep high current devices, transformers, capacitors, and reactors away from the substation property lines.

- For underground duct banks, the minimum distance should be 12 feet from the adjacent property lines or as close to 12 feet as practical.
- Locate new substations close to existing power lines to the extent practical.
- Increase the substation property boundary to the extent practical.

CPUC D.93 11-013 also implemented a number of EMF measurement, research, and education programs. The CPUC did not adopt any specific numerical limits or regulation of EMF levels related to electric power facilities.

The CPUC's January 27, 2006, decision (D.06-01-042) affirmed the 1993 decision on the low-cost/no-cost policy to mitigate EMF exposure for new utility transmission and substation projects. Additionally, the 2006 decision directs the CPUC's Energy Division to pursue and review all available studies regarding EMFs and to review scientific information and report on new findings. The CPUC has been unable to determine whether there is a significant scientifically verifiable relationship between EMF exposure and negative health consequences, and no change to the CPUC EMF policy has been made to date. The CPUC will reconsider its EMF policies and open a new rulemaking, as necessary, if new findings indicate negative EMF health impacts.

At present, the CPUC does not consider EMFs, in the context of California Environmental Quality Act (CEQA), to be an environmental impact because there is no agreement among scientists that EMFs create a potential health risk and because CEQA does not define or adopt standards for defining any potential risk from EMFs. Therefore, EMFs are not addressed in the Environmental Impacts and Assessment section of this resource section.

For further information about EMFs and CPUC guidelines, refer to: http://www.cpuc.ca.gov/PUC/energy/Environment/ElectroMagnetic+Fields.

This page intentionally left blank.

5. Environmental Setting and Environmental Impacts

5.1 Aesthetics

This section describes the environmental and regulatory setting and discusses impacts associated with the construction and operation of the Sanger Substation Expansion Project (proposed project) proposed by Pacific Gas and Electric Company (PG&E, or the applicant) with respect to aesthetics.

5.1.1 Methodology

The Federal Highway Administration's (FHWA's) Visual Impact Assessment for Highway Projects has been commonly used to assess the potential aesthetic impacts of various types of development projects on both public and private lands within a variety of landscapes, including natural, rural, suburban, and urban settings (FHWA 1988). The FHWA recently revised its guidelines for visual impact assessment to allow different levels of documentation, as well as to be more readily understood and practical in its application (FHWA 2015). Consequently, the new FHWA guidelines emphasize transportation projects and no longer incorporate the earlier guidelines' key concepts applicable to assessing various projects, such as transmission lines, substations, and similar industrial-type development projects in rural, suburban, and urban landscapes. Although the new FHWA guidelines incorporate many elements from the FHWA 1988 guidelines, these earlier guidelines remain most applicable for assessing aesthetic impacts of proposed projects within diverse landscape types and on private lands. Therefore, due to the nature and setting of the proposed project, the methodology for this aesthetic impact assessment relies primarily on the process, concepts, and terminology outlined in the earlier FHWA (1988) guidelines.

This aesthetic impact assessment process involves identification of:

1. Aesthetic character and quality of the region and the immediate project area (Section 5.1.2);
2. Important viewing locations (e.g., roads, trails, residential neighborhoods, parks, and overlooks) and the general visibility of the project area and the site using descriptions and photographs (Section 5.1.2);
3. Viewer groups and their sensitivity (e.g., general viewer awareness and concern for views and changes to those views) (Section 5.1.2);
4. Relevant federal, state, and local government policies and concerns for protection of aesthetic resources (Section 5.1.3);
5. Aesthetic impacts of the proposed project and their levels of significance (Section 5.1.4); and
6. Mitigation measures that would reduce aesthetic impacts of the proposed project and reduce significant impacts to less than significant levels (Section 5.1.4).

The criteria for describing aesthetic character and quality include vividness, intactness, and unity, as defined below.

- **Vividness.** The visual power or memorability of landscape components as they combine in striking or distinctive visual patterns.
- **Intactness.** The visual integrity of the natural and human-built landscape and its freedom from encroaching elements. This factor can be present in well-kept urban and rural landscapes, as well as in natural settings.

- **Unity.** The visual coherence and compositional harmony of the landscape considered as a whole. It frequently attests to the careful design of individual components in the landscape. (FHWA 1988)

Viewer sensitivity is also taken into account to determine impacts of a visual change. Viewer sensitivity describes a viewer's expectation or concern for a view based on viewer activity and awareness, any local or cultural significance of the site or area, and any scenic designations associated with the viewing locations, such as scenic vistas or highways.

5.1.2 Environmental Setting

Regional and Local Visual Setting

The surrounding landscape of the existing Sanger Substation is predominately agricultural, with some scattered rural residences, water conveyance facilities, and agriculture processing facilities. Terrain in the area is generally flat. The foothills and high peaks of the Sierra Nevada approximately 30 miles to the east and northeast are often a scenic feature visible throughout the area. Vegetation in the vicinity of the substation is largely cultivated vineyards, orchards, and other agricultural crops with some planted trees, residential landscape plants, and a landscaped median on East Jensen Avenue.

A small convenience store is located directly east of the substation. The closest residences to the proposed project site are along East Jensen Avenue and South McCall Avenue, immediately north and south of the substation expansion area. There are no public parks or open space areas in the vicinity of the proposed project. Highly noticeable elements in the landscape include tall lattice-tower-supported transmission lines crossing roads and tall metal structures at the existing substation. Tall wood power poles along the sides of roads throughout the area are also highly noticeable vertical elements in the surrounding landscape.

The Fence Meadow Repeater Station in the Sierra National Forest is located on a ridge that is immediately adjacent to a fire lookout structure, propane gas tank, graded parking area, and a paved helicopter landing pad. An improved unpaved road leads to the communications site. Existing communications equipment includes a 120-foot tall lattice steel tower that currently has six dish antennas installed near the top of the lattice steel tower. The U.S. Forest Service's Land Resource and Management Plan (LRMP) classifies the majority of surrounding landscape as Visual Condition Type III and IV (see Section 5.1.3).

Viewpoints and Viewer Sensitivity

Methodology

The FHWA assessment methodology (FHWA 1988) was applied for the proposed project to establish a baseline environmental setting, identify and describe the project viewers, and select Viewpoints (VPs) from which to estimate the level of contrast that would be introduced by the project. VPs have been identified to represent typical views in the vicinity of Sanger Substation and are included for geographic reference. Figure 5.1-1 shows the location of each of the 14 VPs within the vicinity of the proposed project area and Figures 5.1-2a through 5.1-2g show ground level views from these locations.

VPs 1, 2, 6, and 7 are most representative of typical views of the proposed project site. These four VPs were selected for more detailed analysis as Key VPs in Table 5.1-1 and in the Environmental Impacts and Assessment section. Visual simulations were prepared for the views from these Key VPs to show the appearance of the proposed project and estimate the level of contrast that would be introduced by its components (Figure 5.1-3a through 5.1-3d). These Key VPs are therefore the focus of the analysis in this

section. There are scattered residences in the vicinity of the proposed project. However, only a few have views wherein the proposed project facilities would be dominant elements. Because these views are visible only from private residences and only impact a few individuals, no Key VPs were selected from residences.

Photographs of the existing communication tower and its immediate surroundings were examined to understand the current visual character of the Fence Meadows Repeater Station Area. Visual simulations were not created given the absence of sensitive receptors and the minimal visual change that would occur as a result of the proposed project. Descriptions provided by the applicant regarding work on the existing tower and the proposed dishes were used to qualitatively compare the current and estimated future visual condition.

Visual Character and Quality and Viewer Sensitivity at Key Viewpoints

Descriptions of the visual character, vividness, intactness, unity, and viewer sensitivity for the four Key VPs are provided in Table 5.1-1.

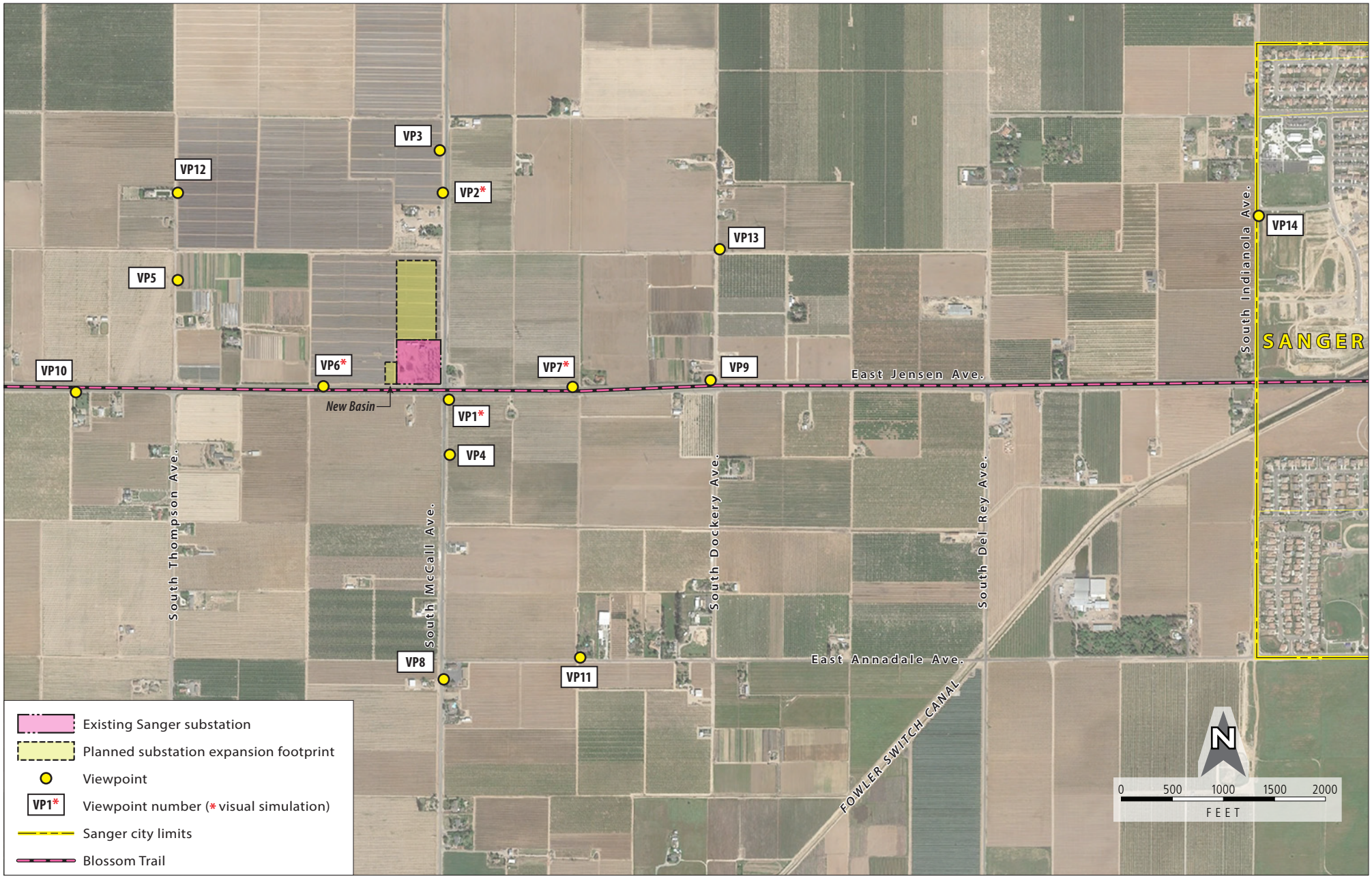

1009133.0001.01.e.ai 05/18/2016

Figure 5.1-1

Viewpoint and Visual Simulation Locations

Sanger Substation Expansion Project

Source: Environmental Vision, September 2015, Proponent's Environmental Assessment



Viewpoint 1 – View northwest from South McCall Avenue at East Jensen Avenue



Viewpoint 2 – View south from South McCall Avenue near closest residence

1009376.0001.01.f.ai 05/18/2016

Figure 5.1-2a

Viewpoints 1 and 2

Sanger Substation Expansion Project

Source: Environmental Vision, September 2015, Proponent's Environmental Assessment



Viewpoint 3 – View south along South McCall Avenue



Viewpoint 4 – View northwest from South McCall Avenue

1009376.0001.01.g.ai 05/18/2016

Figure 5.1-2b

Viewpoints 3 and 4

Sanger Substation Expansion Project

Source: Environmental Vision, September 2015, Proponent's Environmental Assessment



Viewpoint 5 – View southeast from South Thompson Avenue



Viewpoint 6 – View northeast from East Jensen Avenue

1009376.0001.01.h.ai 05/18/2016

Figure 5.1-2c

Viewpoints 5 and 6

Sanger Substation Expansion Project

Source: Environmental Vision, September 2015, Proponent's Environmental Assessment



Viewpoint 7 – View northwest from East Jensen Avenue



Viewpoint 8 – View north from South McCall Avenue near East Annadale Avenue

1009376.0001.01.i.ai 05/18/2016

Figure 5.1-2d

Viewpoints 7 and 8

Sanger Substation Expansion Project

Source: Environmental Vision, September 2015, Proponent's Environmental Assessment



Viewpoint 9 – View west from East Jensen Avenue at South Dockery Avenue



Viewpoint 10 – View east from East Jensen Avenue near South Thompson Avenue

1009376.0001.01.j.ai 05/18/2016

Figure 5.1-2e

Viewpoints 9 and 10

Sanger Substation Expansion Project

Source: Environmental Vision, September 2015, Proponent's Environmental Assessment



Viewpoint 11 – View northwest from East Annadale Avenue



Viewpoint 12 – View southeast from South Thompson Avenue

1009376.0001.01.k.ai 05/18/2016

Figure 5.1-2f

Viewpoints 11 and 12

Sanger Substation Expansion Project

Source: Environmental Vision, September 2015, Proponent's Environmental Assessment



Viewpoint 13 – View southwest from South Dockery Avenue



Viewpoint 14 – View west from South Indianola Avenue

1009376.0001.01.l.ai 05/18/2016

Figure 5.1-2g

Viewpoints 13 and 14

Sanger Substation Expansion Project

Table 5.1-1 Key Viewpoint Descriptions and Aesthetic Qualities

Key Viewpoint and Figure Reference	Visual Character	Vividness	Intactness	Unity	Viewer Sensitivity
Viewpoint 1 View northwest from intersection of South McCall Avenue and East Jensen Avenue (Figure 5.2-3a)	The visual character of this view is primarily developed and industrial. The components of existing substation and associated utility lines and infrastructure dominate the foreground with numerous geometric and vertical forms, as well as linear elements. The roadway, streetlights, traffic lights, and other structures also contribute to the developed character of this view.	*Low,* as the various transmission lines, lattice steel towers, and other substation equipment contrast with the blue sky and, otherwise open, landscape in the view. There is an absence of unique or striking landscape elements or patterns in the view.	*Low,* due to the dominance of encroaching elements with various forms, lines, colors, and textures in foreground view.	*Low,* due to the absence of visual coherence and compositional harmony associated with the varied components of the existing substation in the foreground.	*Moderately high* because it is experienced seasonally and regularly by tourists traveling on the Blossom Trail(1). Additionally, viewer sensitivity on the portion of East Jensen Avenue near the substation is higher due to its county designation as a Scenic Drive(1). Viewers also include a large number and variety of other viewers, including local residents and commuters traveling between the City of Sanger and City of Fresno.
Viewpoint 2 View south from South McCall Avenue, north of substation (Figure 5.2-3b)	The visual character of this view is a mixture of agricultural, industrial, and rural residential. This view is from a location along South McCall Avenue near a rural residence. A portion of the residence and associated trees and other plantings are visible to the right. Vineyards are visible to the left of the road. Wood power poles line the roadway and the existing substation and lattice transmission structures are visible.	*Low,* due to the absence of unique or striking landscape elements or patterns in the view. With the exception of the substation, this view is somewhat typical of views of agriculture, roadways, and rural residences in the area.	*Low,* due to the presence of various encroaching elements associated with the substation and transmission lines in the view. Wood power poles, vineyards, rural residences, and landscape plantings around residences are common elements that reinforce the rural and agricultural character of the area.	*Low,* due to strong contrast of substation and transmission elements with rural landscape, producing low visual coherence and compositional harmony.	*Moderately low* because it is experienced on a semi-regular basis by low to moderate numbers of viewers, the majority of which are workers, commuters, and local area residents engaged in personal business activities. In addition, there are very few residences in the vicinity of the substation and views of the proposed project site from in and around these residences are limited.

Table 5.1-1 Key Viewpoint Descriptions and Aesthetic Qualities

Key Viewpoint and Figure Reference	Visual Character	Vividness	Intactness	Unity	Viewer Sensitivity
Viewpoint 6 View east from East Jensen Avenue (Figure 5.2-3c)	The visual character of this view is a mixture of agricultural, industrial, and natural. This view is from a location along East Jensen Avenue. Open agricultural fields and some clusters of trees and other plantings are visible. Wood power poles lining the roadway and the existing substation and lattice transmission structures are dominant elements in the foreground. The high peaks of the Sierra Nevada are prominent in the background.	*Moderately low,* due to the dominance of the substation and various transmission lines and power poles contrasting with the blue sky, otherwise open landscape, and striking mountain range in the distance.	*Low,* due to the presence of encroaching elements associated with the substation and transmission lines in the foreground contrasting with striking views of the distant mountain range juxtaposed against the flat agricultural landscape. Wood power poles, agricultural fields, and scattered residences with associated landscape plantings are common elements that reinforce the rural and agricultural character of the area.	*Low,* due to the strong contrast of the substation and transmission elements with the open agricultural landscape and distant mountain range, producing low visual coherence and compositional harmony.	*Moderately high* because it is experienced on a regular basis by a large number and variety of viewers, including local residents, workers, commuters, and tourists traveling along the county-designated Scenic Drive(1).
Viewpoint 7 View west from East Jensen Avenue (Figure 5.2-3d)	The visual character of this view is a mixture of agricultural and industrial. This view is from a location along East Jensen Avenue. Vineyards and some clusters of trees and other plantings are visible. Wood power poles lining the roadway and the existing substation and lattice transmission structures are dominant elements in the foreground.	*Low,* due to the dominance of the substation and various transmission lines and power poles contrasting with the blue sky and vineyards and the absence of unique or striking landscape elements or patterns in the view. With the exception of the substation, this view is somewhat typical of views of agricultural lands in the area.	*Low,* due to the presence of encroaching elements associated with the substation and transmission lines contrasting with somewhat typical views of vineyards. Wood power poles and vineyards are common elements that reinforce the agricultural character of the area.	*Low,* due to the strong contrast of the substation and transmission elements with the low vineyards of the agricultural landscape, producing low visual coherence and compositional harmony.	*Moderately high* because it is experienced seasonally and regularly by tourists traveling on the Blossom Trail(1). Viewers also include a large number and variety of viewers travelling on the county-designated Scenic Drive(1), including local residents, workers, commuters, and tourists.

Note:
(1) Refer to Section 5.1.3 for a discussion of the County's designation of Scenic Drives.

State Scenic Highways

There are no designated or eligible State Scenic Highways adjacent to the proposed project. The nearest State Scenic Highway is State Route 180. It is designated Eligible and is 9 miles northeast of the proposed project. The proposed project would not be visible to motorists on this highway. As described in Section 5.1.3, East Jensen Avenue is a county-designated Scenic Drive.

Nighttime Lighting

Nighttime lighting in the vicinity of the project area includes a few streetlights and traffic signals at the intersection of East Jensen Avenue and South McCall Avenue as well as lights at residences. In addition, the existing substation has 47 lights.

5.1.3 Regulatory Setting

Federal

The Sierra National Forest's Land and Resource Management Plan (LRMP) contains goals and management direction which enable the U.S. Forest Service (USFS) to manage the Forest for a mix of activities, allow use and protection of resources, fulfill its legislative requirements and address Regional and National issues. This plan states that visual resources will be managed for the highest quality in areas significant to recreation but that in high resource production areas visual quality will be reduced.

To direct management efforts, the LRMP divides regions of the Forest by visual condition and prescribes progressively more stringent visual quality objectives depending on visual condition (USFS 1991):

- Areas of Type I Visual Condition are to be managed to preserve visual resources.
- Areas of Type II Visual Condition, activities affecting vegetative cover should be visually buffered.
- Areas of Type III Visual Condition activities may be visually evident but should appear subordinate to the landscape's natural character.
- Areas of Type IV Visual Condition may have activities in the foreground and middle ground which appear dominant but suggest features similar to the landscape's natural character.
- Areas of Type V may be dominated by unnatural features.

State

California Department of Transportation Scenic Highway Program

The California Department of Transportation administers the State Scenic Highway Program to preserve and protect scenic highway corridors from change that would diminish the aesthetic value of lands adjacent to highways, per California Streets and Highways Code § 260, et seq. The program includes a list of highways, identified in California Streets and Highways Code § 263, that are eligible for designation or have been designated as scenic highways. There are currently no Officially Designated or Eligible State Scenic Highways that may have views of the proposed project within the project area.

Local

The Open Space and Conservation Element in the Fresno County General Plan discusses the importance of the valley's foothill grasslands and mountain peaks, which are described as important for residential quality of life and economic benefits from tourism and business. The element identifies Landscaped Drives, Scenic Drives, and Scenic Highways as important to the scenic quality of the landscape. No

Landscaped Drives or Scenic Highways are located in or near the project area. The segment of East Jensen Avenue south of the existing substation is a designated Scenic Drive. The Scenic Drive extends west of the project for several blocks and east of the proposed project to beyond the City of Sanger's city limits (Fresno County 2000).

Segments of East Jensen Avenue east of the proposed project site and South McCall Avenue south of the site are part of the Blossom Trail (Figure 5.1-1), which is designated in the Fresno County General Plan as a Scenic Drive and described by the county's Tourism Department as a tour route highlighting and promoting the county's agriculture, scenery, and history (Fresno County 2000, 2016). The Blossom Trail is largely intended to showcase blossoming fruit trees and wildflowers in the spring.

Several goals and policies in the Fresno County General Plan (Fresno County 2000) are relevant to the proposed project:

- ***Policy PF-J.2:*** *Work with local gas and electric utility companies to design and locate appropriate expansion of gas and electric systems, while minimizing impacts to agriculture and minimizing noise, electromagnetic, visual, and other impacts on existing and future residents.*
- ***Goal OS-K:*** *To conserve, protect, and maintain the scenic quality of Fresno County and discourage development that degrades areas of scenic quality.*
- ***Policy OS-K.2:*** *The County shall identify and map significant scenic resources within the County and shall develop a program to manage these resources.*
- ***Goal OS-L:*** *To conserve, protect, and maintain the scenic quality of land and landscape adjacent to scenic roads in Fresno County.*
- ***Policy OS-L.1:*** *The County designates a system of scenic roadways that includes landscaped drives, scenic drives, and scenic highways.*
- ***Policy OS-L.3:*** *The County shall manage the use of land adjacent to scenic drives and scenic highways based on the following principles:*

  b. Proposed high voltage overhead transmission lines, transmission line towers, and cell towers shall be routed and placed to minimize detrimental effects on scenic amenities visible from the right-of-way.

5.1.4 Environmental Impacts and Assessment

Applicant Proposed Measures

The applicant has incorporated the following applicant proposed measures (APMs) into the proposed project to specifically minimize or avoid impacts on aesthetics. Not all APMs were applied to reduce significant impacts, however; APM AES-1 was not applied to reduce impacts to aesthetic resources because no impact was identified that could be minimized through the application of this APM. Nonetheless, APM AES-1 would be implemented by PG&E as part of the proposed project. A list of all project APMs is included in Table 4-5.

APM AES-1: Construction site. Construction activities will be kept as clean and inconspicuous as practical. Where practical, construction storage and staging will be screened from close-range residential views.

APM AES-2: New source of substantial light or glare avoidance. Security lighting at the substation will be directed onsite and will be hooded to reduce potential visibility from offsite locations.

APM AES-3: Structures and equipment at the expanded substation will be a non-reflective finish and neutral gray color.

Impacts on Aesthetics

Table 5.1-2 includes the questions from Appendix G of the California Environmental Quality Guidelines for aesthetics to evaluate the environmental impacts of the proposed project. There are no Designated or Eligible State Scenic Highways within the project area with views of the proposed project. There would be no impact under criterion (b) and a detailed discussion is therefore not provided.

Table 5.1-2 Aesthetics Checklist

Would the project:	Potentially Significant Impact	Less Than Significant with Mitigation Incorporation	Less Than Significant Impact	No Impact
a. Have a substantial adverse effect on a scenic vista?	☐	☐	☒	☐
b. Substantially damage scenic resources, including, but not limited to, trees, rock outcroppings, and historic buildings within a state scenic highway?	☐	☐	☐	☒
c. Substantially degrade the existing visual character or quality of the site and its surroundings?	☐	☐	☒	☐
d. Create a new source of substantial light or glare which would adversely affect day or nighttime views in the area?	☐	☒	☐	☐

a. Would the project have a substantial adverse effect on a scenic vista?

LESS THAN SIGNIFICANT IMPACT

As previously described in Section 5.1.3, the county identifies East Jensen Avenue adjacent to the existing Sanger Substation as a Scenic Drive in its General Plan. Additionally, the proposed project would be visible from segments of the Blossom Trail (Figure 5.1-1). Views from East Jensen Avenue and South McCall Avenue designated as either a Scenic Drive or part of the Blossom Trail are considered scenic vistas in this Initial Study due to their designations in the Fresno County General Plan. Key VPs 1, 6, and 7 are representative of views from these roads. There are no scenic vistas at the Fence Meadow Repeater Station; there would be no impact at the Fence Meadow Repeater Station under this criterion.

Construction

Construction activities in and near the substation site would be noticeable to tourists and other travelers from the Scenic Drive and the Blossom Trail. Construction activities and features that may increase visual contrast and adversely affect scenic vistas include:

- Staging and construction work areas;
- Vehicles and equipment used for excavation and grading activities, transporting and lifting, watering to control dust, worker transport, and other construction activities;
- Soil and vegetation removal and grading for the substation site and transmission structures, temporary pull and tension sites, and new or improved access roads; and

- Temporary outdoor storage of materials, stockpiling of spoils from excavation, security fencing, and construction signage.

Key VP 1 (Figure 5.1-2a) represents views of northbound travelers on the Blossom Trail; Key VPs 6 and 7 (Figure 5.1-2c and Figure 5.1-2d) represent views along the East Jensen Avenue Scenic Drive for east and westbound travelers, respectively. Key VP 7 also represents views of travelers on the Blossom Trail. Construction activities would be visible from these and other locations along travel routes.

Visual sensitivity for VPs 1, 6, and 7 is considered high or moderately high due to the high volume of viewers with moderately high viewer sensitivity (Table 5.1-1); however, overall scenic quality for these views is generally low due to the existing substation and infrastructure that dominate these views and reduce vividness, intactness, and unity to low levels. Construction equipment and activities would introduce new and additional elements in immediate and near foreground views that would result in adverse effects on scenic vistas. These activities would largely take place adjacent to the existing substation site, which already has an industrial appearance. Construction equipment for the proposed project would also look similar to some agricultural equipment used in the area. Contrast due to the presence of construction equipment in the agriculturally dominated area would therefore be minimal and would not substantially reduce vividness, intactness, or unity relative to the existing conditions. Impacts during construction would be less than significant.

Operation and Maintenance

Key VP 1

Figure 5.1-3a shows a visual simulation of the proposed project from Key VP 1. The proposed project would be highly noticeable in the foreground of the view from Key VP 1. The proposed project would not affect vividness, as the modified substation would still contrast with the blue sky and the landscape. There would still be an absence of unique or striking landscape elements. Intactness would remain low given the dominance of the substation equipment, microwave tower, and transmission infrastructure in the view. This effect would be slightly amplified due to reflectivity of conductors or color or finish of structures, especially if they have a shiny finish. Unity would increase to moderately low, as the equipment at the expanded substation and the transmission infrastructure would appear more coherent resulting from reduced clutter and use of monopole structures. Reductions in vividness and intactness would not be substantial. Though the amount of visible transmission and substation infrastructure would increase, it would be consistent with the existing visual character of the area as it would maintain the mix of agriculture and electrical infrastructure. Thus, operation and maintenance of the proposed project would have a slight beneficial aesthetic impact to viewers from Key VP 1, including travelers on the Blossom Trail. There would be no significant aesthetic impact. Furthermore, the potential glare that could impact intactness would be reduced by APM AES-3, which would require that structures and equipment at the expanded substation to have a non-reflective finish and a neutral gray color. Impacts would remain less than significant.

Key VP 6

Figure 5.1-3c shows a visual simulation of the proposed project from Key VP 6. The proposed project would be highly noticeable in the foreground of the view from VP 6. The expanded substation would be visible across more of the view than under current conditions, though the area where the existing substation is located would contain less equipment. Vividness would decrease slightly from moderately low to low since the expanded substation infrastructure would partially shield views of the distant mountains in the left portion of Key VP 6, while views of the mountains would become less shielded as a result of removal of some existing substation infrastructure. The already low intactness would slightly decrease because additional encroaching elements would be introduced to the view due to installation of taller structures (including the microwave tower) that stand out more from the background. This effect

would be slightly amplified due to reflectivity of conductors or color or finish of structures if they have a shiny finish. Unity, which is already low, would be slightly reduced because the substation and transmission elements in the left portion of the view would disrupt the compositional harmony of agricultural views. The reduction is only slight due to existing substation and transmission infrastructure visible from Key VP 6. Reductions in vividness, intactness, and unity would not be substantial. Furthermore, though visual sensitivity is moderately high, motorists and bicyclists on the Scenic Drive would have a view of the proposed project for a limited time as they pass through the area. Though the amount of visible transmission and substation infrastructure would increase, it would be consistent with the existing visual character of the area as it would maintain the mix of agriculture and electrical infrastructure. Impacts to the view from Key VP 6, which includes motorists on the designated Scenic Drive, would be less than significant. Furthermore, the potential glare that could impact intactness would be reduced by APM AES-3, which would require that structures and equipment at the expanded substation would have a non-reflective finish and would be a neutral gray color. Impacts would remain less than significant.

Key VP 7

Figure 5.1-3d shows a visual simulation of the proposed project from Key VP 7. The proposed project would be highly noticeable in the foreground and middleground of the view from VP 7. The vividness of the view would increase slightly, as the additional visible transmission infrastructure and substation infrastructure would create a distinctive vertical and horizontal stripe pattern against the sky. The intactness of the view would slightly decrease because there would be additional encroaching structures across the agricultural landscape. This effect would be slightly amplified due to reflectivity of conductors or color or finish of structures if they have a shiny finish. The decrease would only be slight due to the existing utility infrastructure in the area. Unity of the landscape would increase slightly, as the vertical patterns of the vineyards would be repeated in the vertical patterns of the transmission infrastructure. Reductions in vividness, intactness, and unity would not be substantial. Furthermore, though visual sensitivity is moderately high, motorists and bicyclists on the Scenic Drive would have a view of the proposed project for a limited time as they pass through the area. Although the amount of visible transmission and substation infrastructure would increase, it would be consistent with the existing visual character of the area as it would maintain the mix of agriculture and electrical infrastructure. Impacts to motorists on the Scenic Drive would be less than significant. Furthermore, the potential glare that could impact intactness would be reduced by APM AES-3, which would require that structures and equipment at the expanded substation would have a non-reflective finish and would be a neutral gray color. Impacts would remain less than significant.

c. Would the project substantially degrade the existing visual character or quality of the site and its surroundings?

LESS THAN SIGNIFICANT IMPACT

Key VPs 1, 6, and 7 are representative of views from scenic vistas and are discussed under criterion (a), above. Key VP 2 is representative of other public views and is discussed under this criterion.

Construction

Construction activities in and near the substation site would be noticeable to commuters on South McCall Avenue. Construction activities and features that may increase visual contrast and adversely affect visual character and quality include:

- Staging and construction work areas;

- Vehicles and equipment used for excavation and grading activities, transporting and lifting, watering to control dust, worker transport, and other construction activities;
- Soil and vegetation removal and grading for the substation site and transmission structures, temporary pull and tension sites, and new or improved access roads; and
- Temporary outdoor storage of materials, stockpiling of spoils from excavation, security fencing, and construction signage.

Key VP 2 represents views from South McCall Avenue. Visual sensitivity for VP 2 is moderately low given most viewers are commuters or residents engaged in personal business activities and commuting; however, overall scenic quality from this view is low due to low unity, vividness, and intactness. Construction equipment and activities would introduce new and additional elements in immediate and near foreground views that would result in adverse effects on scenic vistas. These activities would largely take place adjacent to the existing substation site, which already has an industrial appearance. Construction equipment for the proposed project would also look similar to some agricultural equipment used in the area. Contrast due to the presence of construction equipment in the agriculturally dominated area would therefore be minimal and would not substantially reduce vividness, intactness, or unity relative to the existing conditions. Impacts during construction in the vicinity of the Sanger Substation would be less than significant.

At the Fence Meadow Repeater Station, activities to mount the four dish antennas on the existing tower would take about 1 week, with 1 crane and 1 to 2 utility trucks. The level of construction activity proposed at the repeater station would be very low and the construction would be short in duration. There is existing telecommunications and other infrastructure at the repeater station. Thus, installation activities over a week's time would result in only a negligible change. Visual impacts at the Fence Meadow Repeater Station would be less than significant.

Operation and Maintenance

A visual simulation of Key VP 2 during operation of the proposed project is shown in Figure 5.1-3b. In this view, structures would be closer and appear taller and more noticeable than structures at the existing substation and the existing transmission lines. The vividness of the view would decrease slightly, as the existing visual pattern is comprised of linear elements (i.e., the road, existing transmission lines) extending forward into the horizon, while the proposed project would add a horizontal element in the form of metal monopoles that would contrast with the existing lines. The reduction would be only slight, as the proposed transmission poles would mimic vertical patterns from existing poles. Intactness would decrease slightly; there would be more encroaching elements in the form of more visible transmission poles and substation infrastructure, but it would be only an incremental increase over the amount of existing infrastructure. This effect would be slightly amplified due to reflectivity of conductors or color or finish of structures if they have a shiny finish. Likewise, unity would decrease only slightly. The proposed transmission structures would be consistent with existing structures, though the horizontal conductor would clash somewhat with the vertical poles. Furthermore, although motorists and bicyclists may have an extended time of viewing the proposed project (on the order of minutes), visual sensitivity is moderately low. Although the amount of visible transmission and substation infrastructure would increase, it would be consistent with the existing visual character of the area as it would maintain the mix of agriculture and electrical infrastructure. Impacts to viewers at Key VP 2 would be less than significant. Furthermore, the potential glare that could impact intactness would be reduced by APM AES-3, which would require that structures and equipment at the expanded substation would have a non-reflective finish and would be a neutral gray color. Impacts would still not be significant.

No key viewpoints were developed for the microwave dish antennas to be installed on the existing communications tower at the Fence Meadow Repeater Station in the Sierra National Forest, which is an area which is classified as Type IV visual condition. The current tower is 120 feet tall and has six dish antennas installed on the tower. Installation of two new dish antennas of approximately the same size (four feet in diameter) would not substantially change the existing site visual character and quality. Installation of the antennas would not introduce new visual elements to the area, and viewers would likely not recognize the visual change given the existing equipment on the tower. Given similar structures and equipment is already present in this area where the USFS allow unnatural features to dominate the immediate area per Type IV visual condition, installation of the proposed antennas would be consistent with the existing visual character of the area. Impacts at the Fence Meadow Repeater Station would be less than significant.

d. Would the project create a new source of substantial light or glare which would adversely affect day or nighttime views in the area?

LESS THAN SIGNIFICANT IMPACT WITH MITIGATION

Construction

Construction of the proposed project is scheduled to occur during daylight hours; the only activity that may take place during the night would be testing and line work. Such work would require nighttime lighting. Nighttime lighting may also be required for security of the substation site during construction. Given the limited amount of night light sources in the area, construction lighting used along the transmission line alignments and in the substation area may create a new source of substantial light in the area if lights are directed toward roadways or sensitive receptors, which would be a significant impact. MM AES-1 would require that lighting be shielded and oriented away to minimize impacts on nearby sensitive receptors, which include residences and motorists. Impacts would be less than significant with implementation of MM AES-1.

> **MM AES-1:** Lighting utilized for night-time construction and for security during construction shall be shielded and oriented away from sensitive receptors.

Project construction equipment and materials may generate glare during daytime hours; however, impacts would be temporary and dependent upon the location of the sun and the orientation of the construction equipment, which would frequently change location within the construction site. Because glare would be intermittent and temporary, daytime impacts from glare during construction would be less than significant.

Operation and Maintenance

During operation, substation lighting, including security lighting, would consist of non-glare light-emitting diode lamps that would be hooded and would be designed to avoid lighting offsite locations. Lights would be located on:

- 10-foot tall galvanized steel poles
- Transfer bus structures
- Modular Protection Automation Control (MPAC) buildings
- MPAC building landings

There would be a total of 107 lights at the expanded substation, which would be an increase of 60 lights over the existing substation. Given that the number of lights would more than double compared to the existing substation and that there are minimal nighttime light sources in the area, the proposed project

would result in a substantial new source of light in the project area. New sources of light would have significant adverse nighttime light effects. Implementation of APM AES-2 would ensure that nighttime lighting would be hooded and directed onsite to eliminate offsite light spill. Operation of the proposed project would have a less than significant impact from a new light source with implementation of APM AES-2.

Project features with the potential to create glare include any equipment installed within the substation, such as switch racks, the telecommunications microwave tower, buses, transformers, conductors on the subtransmission line loop-in, and poles used for the subtransmission line. There would be no lighting installed at the Fence Meadow Repeater Station, and the dishes do not create glare (see Figure 4-5). The new dishes at the Fence Meadow Repeater Station would therefore not add a new source of light or glare. The metallic components at the expanded substation and along the reconfigured power lines may create substantial glare, which would be a significant impact. Implementation of APM AES-3 would ensure that structures and equipment installed as part of the proposed project would have a neutral gray, non-reflective finish to minimize the potential for glare. Glare from conductor, however, could still be significant. MM AES-2 would require use of non-specular conductor. Impacts would be less than significant with mitigation.

MM AES-2: All conductor used for the proposed project shall be non-specular.

This page intentionally left blank.



Existing Condition



Visual Simulation of Proposed Condition

1009376.0001.01.a.ai 05/18/2016

Figure 5.1-3a

Key Viewpoint 1 (Visual Simulation):
View from South McCall Avenue at East Jensen Avenue Looking Northwest

This page intentionally left blank.



Existing Condition



Visual Simulation of Proposed Condition

1009376.0001.01.b.ai 05/18/2016

Figure 5.1-3b

Key Viewpoint 2 (Visual Simulation):
View from South McCall Avenue Near Closest Residence

This page intentionally left blank.



Existing Condition



Visual Simulation of Proposed Condition

1009376.0001.01.c.ai 05/18/2016

Figure 5.1-3c

Key Viewpoint 6 (Visual Simulation):
View from East Jensen Avenue Looking Northeast

This page intentionally left blank.



Existing Condition



Visual Simulation of Proposed Condition

1009376.0001.01.d.ai 05/18/2016

Figure 5.1-3d

Key Viewpoint 7 (Visual Simulation):
View from East Jensen Avenue Looking Northwest

This page intentionally left blank.

5.2 Agriculture and Forest Resources

This section describes the environmental and regulatory setting and discusses impacts associated with the construction and operation of the Sanger Substation Expansion Project (proposed project) proposed by Pacific Gas and Electric Company (PG&E, or the applicant) with respect to agriculture and forest resources.

As part of the proposed project, PG&E would mount two dishes, each measuring about four feet in diameter, on an existing tower at the Fence Meadow Repeater Station in the Sierra National Forest. No ground disturbance would occur as a result of the installation, and existing roads would be used to access the site; therefore, there would be no impacts to forest land as a result of work on the proposed project at the Fence Meadow Repeater Station. The antenna system at Fence Meadow Repeater Station would also not impact agricultural resources and is therefore not discussed further in this section.

Forest land, timberland, and timberland zoned timberland production as defined by Public Resources Code Section 12220(g), Section 4526, and Government Code Section 51104(g), respectively, are not present on or near any areas of the proposed project site other than forest land around the Fence Meadow Repeater Station. The proposed project would therefore not impact these resources, so they are not discussed further in this section.

5.2.1 Environmental Setting

Agriculture Resources

The proposed project would be located in Fresno County, one of eight counties that make up the San Joaquin Valley in the southern portion of California's Central Valley (Galloway et al. 1999). Positioned just south of the Sacramento-San Joaquin River Delta, bounded to the east by the Sierra Nevada Mountains, and to the west by the Coastal Ranges, the San Joaquin Valley is California's most agriculturally productive region. Since the 1950s, Fresno County has been a national leader in the production of high-value farm products (Fresno County 2000). Almonds, milk, livestock, raisin grapes, and tomatoes are among the county's leading commodities (CDFA 2013).

To quantify the types and importance of agricultural land uses, the California Department of Conservation maintains the Farmland Mapping and Monitoring Program (FMMP) to monitor and rate agricultural resources. The FMMP categorizes agricultural land based on soil quality, irrigation status, and aerial photography (CDC 2015). The FMMP categories for California Environmental Quality Act (CEQA) purposes include:

- Prime Farmland;
- Farmland of Statewide Importance;
- Unique Farmland;
- Farmland of Local Importance; and
- Grazing Land (CDC 2015).

Table 5.2-1 summarizes FMMP designated Farmland in Fresno County.

Table 5.2-1 FMMP Farmland in Fresno County

Farmland Types in Fresno County	Acres
Prime Farmland	678,103
Farmland of Statewide Importance	404,085
Unique Farmland	93,655
Farmland of Local Importance	179,494
Grazing Land	825,275

Source: CDC 2014

Williamson Act

As described in greater detail in Section 5.2.2, "Regulatory Setting," the Williamson Act (California Land Conservation Act of 1965) enables local governments to enter into contracts with private landowners for the purpose of restricting the use of those lands to agricultural or compatible uses. Figure 5.2-1 shows land under the Williamson Act in the project area and vicinity. With the exception of the land east of the project area, the land surrounding the existing Sanger Substation is under Williamson Act contracts. The existing Sanger Substation is not located on a parcel under a Williamson Act contract, but the substation expansion area would be located primarily on a portion of a parcel under a Williamson Act contract. The entire Williamson Act parcel measures 112.2 acres. The reconfigured power line would be located on this same parcel but also on two additional parcels to the west and south that are also under a Williamson Act contract. The parcel to the south of the existing Sanger Substation measures 36.0 acres; the parcel to the west measures 38.7 acres.

5.2.2 Regulatory Setting

Federal

There are no federal laws or regulations for agricultural resources that are applicable to the proposed project.

State

California Land Conservation Act of 1965

The California Land Conservation Act of 1965, commonly referred to as the "Williamson Act," enables local governments to enter into ongoing, minimum 10-year contracts with private landowners for the purpose of restricting specific parcels of land to agricultural or compatible uses (Government Code §51200 et seq.). In return, restricted parcels are assessed for property tax purposes at a rate consistent with their actual uses, farming uses, and open space uses, as opposed to potential market value.

Government code section 51238.1(a) states that uses on the land must be consistent with the following specific compatibility criteria:

1. *The use will not significantly compromise the long-term productive agricultural capability of the subject contracted parcel or parcels or on other contracted lands in agricultural preserves.*
2. *The use will not significantly displace or impair current or reasonably foreseeable agricultural operations on the subject contracted parcel or parcels or on other contracted lands in agricultural preserves. Uses that significantly displace agricultural operations on the subject contracted parcel or parcels may be deemed compatible if they relate directly to the production of commercial agricultural products on the subject contracted parcel or parcels or neighboring lands, including activities such as harvesting, processing, or shipping.*

3. *The use will not result in the significant removal of adjacent contracted land from agricultural or open-space use. In evaluating compatibility a board or council shall consider the impacts on non-contracted lands in the agricultural preserve or preserves.*

Local

Fresno County Code of Ordinances

Pursuant to Fresno County Code of Ordinances § 816.2-D, electrical transmission and distribution substations are permitted uses within Exclusive Agriculture (AE) Districts, subject to approval of a conditional use permit by the Fresno County Director of Public Works and Planning. However, the CPUC has preemptive power under the California Constitution (Article XII, Section 8) over local jurisdictions with respect to regulation of investor-owned public utilities and electric utility siting.[1] The CPUC therefore has ultimate decision making authority over land use decisions for the proposed project.

Fresno County General Plan

The following Fresno County General Plan (Fresno County 2000) policy is relevant to the proposed project:

- ***Policy LU-A.13:*** *The County shall protect agricultural operations from conflicts with nonagricultural uses by requiring buffers between proposed non-agricultural uses and adjacent agricultural operations.*

5.2.3 Environmental Impacts and Assessment

Applicant Proposed Measures

The applicant has incorporated an applicant proposed measure (APM) into the proposed project to specifically minimize or avoid impacts on agriculture. A list of all project APMs is included in Table 4-5.

APM AGR-1: Agriculture Impacts Avoidance and compensation. To avoid potential impacts on agriculture, PG&E will work with farmers to conduct its work between their harvest and planting periods where and whenever possible. In areas containing crops that must be removed and replaced to gain access to pole sites for construction purposes, PG&E will provide compensation to farmers and/or landowners in accordance with PG&E's Property Damage Settlement Guidelines, including compensation to replace the removed crops. Within 6 months of completion of project construction, PG&E shall also repair, replace or provide compensation for damage to fences, irrigation facilities and other such agricultural infrastructure. Access across active crop areas will be negotiated with the farmers and/ or owners in advance of any construction activities.

Impacts on Agriculture and Forest Resources

Table 5.2-2 includes the significance criteria from Appendix G of the CEQA Guidelines for Agriculture and Forestry Resources to evaluate the environmental impacts of the proposed project. As previously discussed, there would be no impact to forest land at the Fence Meadow Repeater Station. Furthermore, no forest land, timberland, or timberland zoned timberland production as defined by Public Resources Code Section 12220(g), Section 4526, and Government Code Section 51104(g), respectively, are present on or near any areas of the proposed project site other than forest land around the Fence Meadow

[1] Public Utilities Commission General Order -131D, section XIV, states: This General Order clarifies that local jurisdictions acting pursuant to local authority are preempted from regulating electric powerline projects, distribution lines, substations, or electric facilities constructed by public utilities subject to the Commission's jurisdiction.

Repeater Station. There would be no impact to these resources. A detailed analysis for significance criteria (c) and (d) is therefore not provided.

Table 5.2-2 Agriculture and Forest Resources Checklist

Would the project:	Potentially Significant Impact	Less Than Significant with Mitigation Incorporation	Less Than Significant Impact	No Impact
a. Convert Prime Farmland, Unique Farmland, or Farmland of Statewide Importance (Farmland), as shown on the maps prepared pursuant to the Farmland Mapping and Monitoring Program of the California Resources Agency, to non-agricultural use?	☐	☒	☐	☐
b. Conflict with existing zoning for agricultural use, or a Williamson Act contract?	☐	☐	☐	☒
c. Conflict with existing zoning for, or cause rezoning of, forest land (as defined in Public Resources Code section 12220(g)) or timberland (as defined in Public Resources Code section 4526), or timberland zoned Timberland Production (as defined by Government Code section 51104(g))?	☐	☐	☐	☒
d. Result in the loss of forest land or conversion of forest land to non-forest use?	☐	☐	☐	☒
e. Involve other changes in the existing environment which, due to their location or nature, could result in conversion of Farmland to non-agricultural use or conversion of forest land to non-forest use?	☐	☐	☒	☐

a. Would the project convert Prime Farmland, Unique Farmland, or Farmland of Statewide Importance (Farmland), as shown on the maps prepared pursuant to the Farmland Mapping and Monitoring Program of the California Resources Agency, to non-agricultural use?

LESS THAN SIGNIFICANT WITH MITIGATION

The California Department of Conservation maps FMMP land in units that are 10 acres in size or greater. Conversion of 10 acres or more of Farmland would, on its own, require re-designation of Farmland to non-Farmland uses. Furthermore, in the Williamson Act, the legislature declared that agricultural land is presumed large enough to sustain agricultural use if it is at least 10 acres for prime agricultural land and at least 40 acres for land that is not prime agricultural land. “Prime agricultural land” is defined differently under the Williamson Act (see California Government Code §51201(c)), but the legislative declaration is indicative of the minimum size of productive agricultural land. The substation expansion area and most of the power line reconfiguration area are located on soil that when irrigated is designated as class 2 under the Natural Resources Conservation Service (NRCS) land use capability classification and therefore is considered “prime agricultural land” (California Government Code § 51201(c)(1); NRCS 2016). The remainder of the power line reconfiguration work would occur on land that would not be “prime agricultural land.” Given that the majority of the proposed project would be located on “prime agricultural land,” an impact is therefore considered significant if it would result in conversion of 10 acres or more such that the conversion would eliminate an area of land that could on its own sustain agricultural use.

Construction

Construction of the proposed project would temporarily impact and disturb about 21.84 acres of Farmland, 14.94 acres of which are Prime Farmland and 6.9 acres of which are Farmland of Statewide Importance (Table 5.2-3; Figure 5.2-1). The proposed project would not be located on or affect Unique Farmland.

Table 5.2-3 Farmland in the Sanger Project Area

Farmland Category	Temporary Disturbance Acreage	Permanent Disturbance Acreage
Prime Farmland	14.94 acres	7.09 acres
Farmland of Statewide Importance	6.90 acres	0.06 acres
Total*	21.84 acres	7.15 acres

Source: CDC 2014
*Total values were rounded to the nearest tenth after adding unrounded values for Prime Farmland and Farmland of Statewide Importance.

Ground disturbing activities would occur for up to 24 to 30 months during construction, which could affect multiple growing seasons and could affect the grade of the land and condition of the soil. Furthermore, the removal of orchard trees and vineyards would be a long-term impact due to the length of time it takes for trees to mature.

The proposed project would temporarily impact more than 10 acres of Farmland (Prime Farmland and Farmland of Statewide Importance), as shown in Table 5.2-3. Impacts on Farmland would be significant given the substantial acreage that would be temporarily converted. Per APM AGR-1, PG&E would coordinate construction to be outside of harvest and planting periods to the extent feasible and would provide compensation to farmers and/or landowners for the removal of permanent crops. Implementation of APM AGR-1 would reduce some temporary impacts due to scheduling and would address the financial impacts of the temporary disturbance of the proposed project; however, the environmental effects of the proposed project to Farmlands would remain significant because APM AGR-1 does not address restoration of farmland to pre-project conditions. Mitigation Measure (MM) AGR-1 supplements APM AGR-1 and would require the applicant to restore the temporarily disturbed Farmland to preconstruction conditions at the completion of construction. Impacts to Farmlands during construction would be less than significant after implementation of APM AGR-1 and MM AGR-1.

MM AGR-1: Farmland Construction Impact Mitigation (supplements APM AGR-1). PG&E shall implement the following measures for temporarily disturbed Farmland:

- The applicant shall survey agricultural fields prior to construction and return all temporary disturbance areas to pre-construction conditions (i.e, meeting the definition of Prime Farmland, Unique Farmland, or Farmland of Statewide Importance, as shown on the maps prepared pursuant to the Farmland Mapping and Monitoring Program of the California Resources Agency) after the completion of construction, except that crops will not be replanted.
- If topsoil is removed from an area to accommodate temporary construction activities, it shall be restored to preconstruction conditions within two months of the completion of construction, except that crops will not be replanted by PG&E.

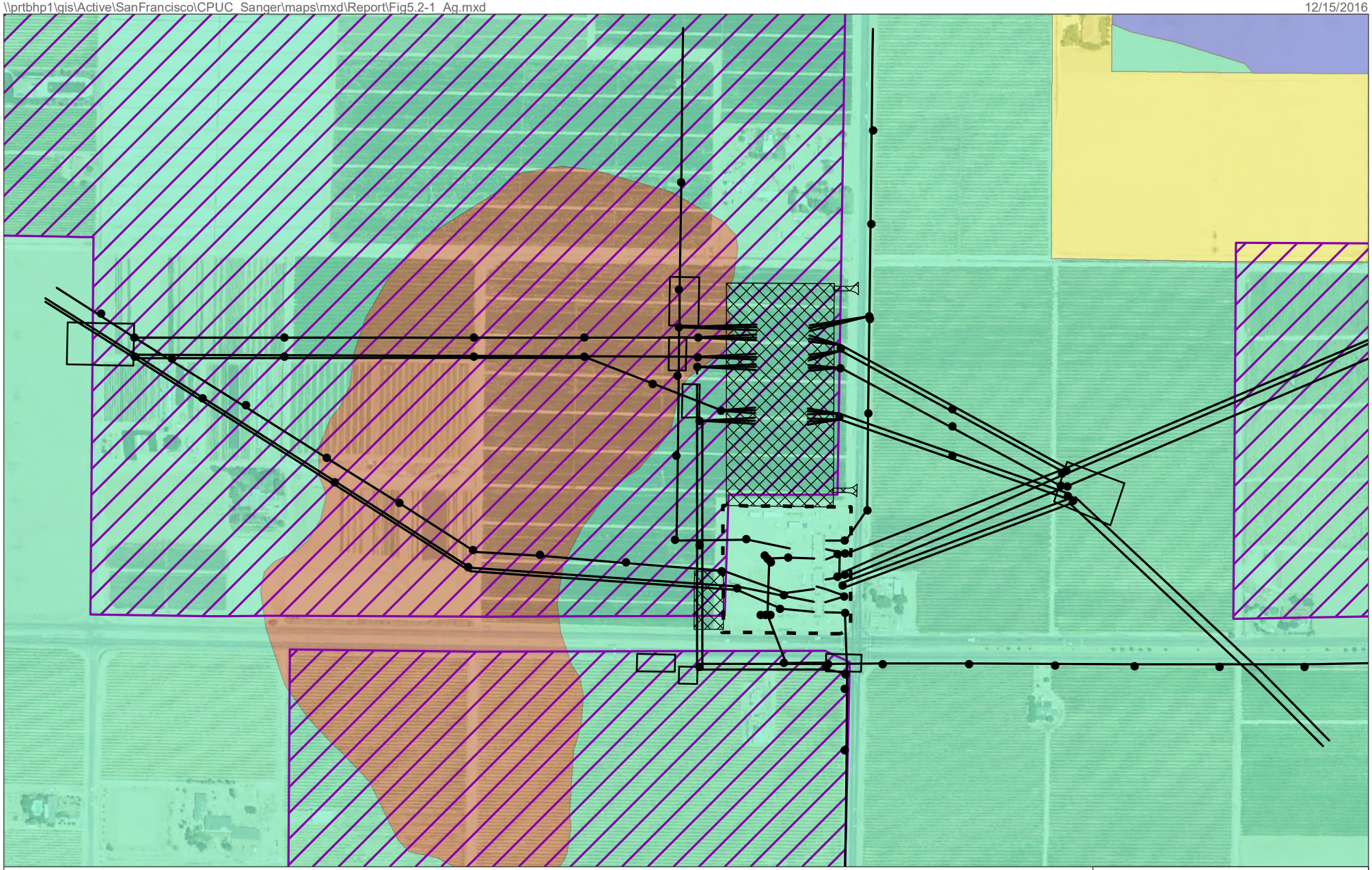

Figure 5.2-1
FMMP and Williamson Act Land
Sanger Substation
Fresno County, CA

Operation and Maintenance

During operation, the proposed project would permanently impact about 7.15 acres of land, 7.09 acres of which are Prime Farmland and 0.06 acres of Farmland of Statewide Importance (Table 5.2-3). The proposed project would permanently convert less than 10 acres of Farmland. Impacts would be less than significant, and no mitigation would be required.

b. Would the project conflict with existing zoning for agricultural use, or a Williamson Act contract?

Zoning for Agricultural Use

NO IMPACT

The entire proposed project would be within an AE District zone designated by Fresno County. Fresno County Code of Ordinances § 816.2-D permits electrical transmission and distribution substations on this land designation with approval of a conditional use permit by the Fresno County Director of Public Works and Planning; therefore, the proposed project would not conflict with existing zoning for agricultural use. Impacts related to conflicting with agricultural zoning would be less than significant.

Williamson Act Contract

NO IMPACT

The policy of the state, consistent with the purpose of the Williamson Act to preserve and protect agricultural land, is to avoid, whenever practicable, locating public improvements and any public utilities improvements in agricultural preserves (Government Code §51290(a)). An "agricultural preserve" is an area devoted to agricultural use (Government Code §51201(d)). If it is necessary to locate a public improvement within a preserve, it is state policy that the improvement shall, whenever practicable, be located on land that is not under a Williamson Act contract (Government Code §51290(b)).

A part of the substation expansion area, as well as most of the power line reconfiguration routes, would be located on parcels that are currently under Williamson Act contracts. For the proposed project, PG&E has indicated it would acquire the land and land rights necessary to construct the project "in lieu of eminent domain" or with eminent domain. The Williamson Act contact would be terminated upon acquisition, and there would be no conflict with contracted land (Government Code §51295). There would be no impact.

e. Would the project involve other changes in the existing environment which, due to their location or nature, could result in conversion of Farmland to non-agricultural use or conversion of forest land to non-forest use?

Construction

LESS THAN SIGNIFICANT

The proposed project would involve ground disturbing activities throughout construction, which could damage agricultural facilities such as irrigation infrastructure. Damage to such facilities could interfere with normal agricultural operations and could therefore result in conversion of Farmland to non-agricultural use. This would be a significant impact. APM AGR-1 would require that PG&E compensate farmers and landowners in accordance with their Property Damage Settlement Guidelines and would require the applicant to restore damaged agricultural infrastructure to preconstruction conditions at the completion of construction or provide compensation for damage. Impacts resulting in the conversion of farmland infrastructure during construction would be less than significant after implementation of APM AGR-1.

Operation and Maintenance

Operation and maintenance of the proposed project would not involve other changes in the existing environment, such as precluding access or water supply to an agricultural area that would result in conversion of Farmland to non-agricultural use. There would be no impact.

5.3 Air Quality

This section describes the environmental and regulatory setting and discusses impacts associated with the construction and operation of the Sanger Substation Expansion Project (proposed project) proposed by Pacific Gas and Electric Company (PG&E, or the applicant) with respect to air quality.

5.3.1 Environmental Setting

Air Basin

The proposed project would be located in the heart of the San Joaquin Valley, in unincorporated Fresno County, approximately 2 miles west of Sanger and 3 miles southeast of Fresno. Fresno County is part of the San Joaquin Valley Air Basin (SJVAB), which also includes Kings, Madera, Merced, San Joaquin, Stanislaus, and Tulare Counties, as well as the San Joaquin Valley portion of Kern County. The SJVAB stretches about 250 miles and comprises the southern half of California's Central Valley. It is bordered by the Sierra Nevada Mountains in the east (8,000 to 14,491 feet in elevation), the Coast Ranges in the west (averaging 3,000 feet in elevation), and the Tehachapi Mountains in the south (6,000 to 7,981 feet in elevation). At its northern end is the Sacramento Valley, which makes up the northern half of California's Central Valley. The San Joaquin Valley's elevation slightly increases from sea level at the northwest end, where it opens to the San Francisco Bay at the Carquinez Straits, to 408 feet in elevation at Bakersfield, in the southeast end (SJVAPCD 2015a).

Climate and Meteorology

The overall climate in the SJVAB is warm and semi-arid. The San Joaquin Valley is in a Mediterranean Climate Zone, which is characterized by sparse rainfall, which occurs mainly in the winter. There is only one wet season during the year, which is from October through April, during which time the SJVAB receives 90 percent of annual precipitation. Snow and thunderstorms are infrequent. Summers are hot and dry, with maximum temperatures often exceeding 100 degrees Fahrenheit. During the summer, wind usually originates at the north end of the valley and flows in a south-southeasterly direction through the valley and the Tehachapi Pass, into the Mojave Desert. During the winter months, the San Joaquin Valley experiences light and variable winds that are less than 10 miles per hour (SJVAPCD 2015a).

Air temperature in the lowest layer of the atmosphere typically decreases with altitude. However, meteorological factors can occasionally create conditions for the temperature to increase with altitude. The height at which the temperature stops decreasing with altitude and starts increasing is called inversion height, or "mixing height." Pollutants mix vertically up to the mixing height, above which vertical dispersion is inhibited. Therefore, a temperature inversion causes the air pollutants to be trapped below the inversion height, resulting in higher ambient pollutant concentrations. Wintertime inversion events in the valley can often last many weeks and can be very strong, with mixing heights of only a few hundred feet (SJVAPCD 2015a).

Ambient Air Quality

The U.S. Environmental Protection Agency (EPA) and the California Air Resources Board (CARB) have established ambient air quality standards for several pollutants based on their adverse health effects. The EPA has set National Ambient Air Quality Standards (NAAQS) for ozone (O_3), carbon monoxide (CO), nitrogen dioxide (NO_2), particulate matter less than 10 microns (PM_{10}), fine particulate matter less than 2.5 microns ($PM_{2.5}$), sulfur dioxide (SO_2), and lead (Pb). These pollutants are commonly referred to as "criteria pollutants." Primary standards were set to protect public health; secondary standards were set to protect public welfare against visibility impairment, damage to animals, crops, vegetation, and buildings. In addition, CARB has established California Ambient Air Quality Standards (CAAQS) for these

pollutants, as well as for sulfate (SO_4), visibility reducing particles, hydrogen sulfide (H_2S), and vinyl chloride. California standards are generally stricter than national standards.

Attainment defines the status of a given airshed with regard to NAAQS or CAAQS requirements. Airsheds not meeting these standards are classified as "nonattainment." Table 5.3-1 summarizes the federal and state attainment status for the SJVAB, as of 2016, based on the NAAQS and CAAQS, respectively.

Table 5.3-1 Attainment Status for the San Joaquin Valley Air Pollution Control District

Pollutant	Designation/Classification	
	Federal	State
Ozone	Nonattainment/Extreme(1),(2)	Nonattainment/Severe
PM_{10}	Attainment(3)	Nonattainment
$PM_{2.5}$	Nonattainment(4)	Nonattainment
Carbon monoxide (CO)	Unclassifiable/Attainment	Attainment/Unclassified
Nitrogen dioxide (NO_2)	Unclassifiable/Attainment	Attainment
Sulfur dioxide (SO_2)	Attainment/Unclassified	Attainment
Lead (Pb)	Unclassifiable/Attainment	Attainment
Hydrogen sulfide (H_2S)	No Federal Standard	Unclassified
Sulfates (SO_4)	No Federal Standard	Attainment
Visibility reducing particulate	No Federal Standard	Unclassified
Vinyl chloride	No Federal Standard	Attainment

Source: SJVAPCD 2016

Notes:

(1) Even though the EPA revoked the federal 1-hour ozone standard, including associated designations and classifications, in 2005, the EPA had previously classified the SJVAB as in extreme nonattainment for this standard. The EPA approved the 2004 Extreme Ozone Attainment Demonstration Plan on March 8, 2010. Many applicable requirements for extreme 1-hour ozone nonattainment areas continue to apply to the SJVAB.

(2) Though the San Joaquin Valley was initially classified as being in serious nonattainment for the 1997 8-hour ozone standard, the EPA approved the reclassification to extreme nonattainment in the Federal Register on May 5, 2010.

(3) On September 25, 2008, The EPA redesignated the San Joaquin Valley to attainment for the PM_{10} standard and approved the PM_{10} Maintenance Plan.

(4) The San Joaquin Valley is designated nonattainment for the 1997 $PM_{2.5}$ standard. The EPA designated the San Joaquin Valley as being in nonattainment for the 2006 $PM_{2.5}$ standard on November 13, 2009.

Key:

EPA United States Environmental Protection Agency
PM_{10} particulate matter less than 10 microns in diameter
$PM_{2.5}$ particulate matter less than 2.5 microns in diameter
SJVAB San Joaquin Valley Air Basin

The San Joaquin Valley Air Pollution Control District (SJVAPCD), CARB, National Park Service, and Santa Rosa Rancheria in Lemoore operate an extensive network of air monitoring stations in the SJVAB. The monitoring station network provides air quality monitoring data, including real-time meteorological data and ambient pollutant levels, as well as historical data. The network in the SJVAB consists of 36 monitoring stations, nine of which are located in Fresno County (SJVAPCD 2015c). Table 5.3-2 presents the average ambient pollutant concentrations and the exceedances of state and federal standards that have occurred at the monitoring stations in Fresno County and in the SJVAB from 2012 through 2015, the most recent years for which data are available.

Table 5.3-2 Ambient Air Quality in Fresno County and San Joaquin Valley Air Basin – California Ambient Air Quality Standards

Pollutant	Area	2012	2013	2014	2015	2012	2013	2014	2015
Ozone		#Days > State 1-Hour Std				Max 1-Hour Observation			
	Fresno County	17	10	13	12	0.112	0.108	0.111	0.115
	San Joaquin Valley Air Basin	72	41	48	47	0.135	0.123	0.128	0.135
Ozone		#Days > State 8-Hour Std				Max State 8-Hour Average			
	Fresno County	56	49	52	43	0.095	0.095	0.096	0.097
	San Joaquin Valley Air Basin	134	112	128	99	0.116	0.106	0.105	0.110
$PM_{2.5}$		#Days > National 24-Hour Std				Max State 24-Hour Average			
	Fresno County	19.1	28.6	33.9	14.8	64.9	86.8	69.6	65.6
	San Joaquin Valley Air Basin	29.4	50.4	41.8	38	93.4	167.3	107.2	111.9
PM_{10}		#Days > State 24-Hour Std				Max State 24-Hour Average			
	Fresno County	55.8	122.3	108.9	80.3	87.9	133.7	106.3	77.5
	San Joaquin Valley Air Basin	89.4	122.3	138.8	121.4	125.8	183.6	419.5	104.4

Source: CARB 2015a

Key:
Est estimated
PM_{10} particulate matter less than 10 microns in diameter
$PM_{2.5}$ particulate matter less than 2.5 microns in diameter

Toxic Air Contaminants

Air pollutants that have been identified as posing the most substantial health risk in California are called toxic air contaminants (TACs) under California law (Health and Safety Code §§ 39650 et seq.). The substances that have been determined by the State Board to be toxic air contaminants are identified in the California Code of Regulation, Title 17, Section 90000. TACs include asbestos, chemical compounds, and certain metals. Direct exposure to these pollutants has been shown to cause cancer, birth defects, damage to brain and nervous system, and respiratory disorders. Since no safe levels of TACs can be determined, there are no air quality standards for TACs. Instead, TAC impacts are evaluated by calculating the health risks associated with a given exposure. The requirements of the Air Toxic "Hot Spots" Information and Assessment Act apply to facilities that use, produce, or emit toxic chemicals.

Sensitive Receptors

Sensitive receptors are areas occupied by individuals or other organisms that are more susceptible to the adverse effects of exposure to air pollutants. The most common sensitive receptors are residences, apartments, hospitals, schools, daycare facilities, elderly housing, and convalescent facilities. These areas may have an increased sensitivity to contaminants because of the age and health of their occupants or because of their proximity and increased exposure to the contamination source. The Air Quality and Land Use Handbook (CARB 2005) indicates several source categories that have the potential to cause long-term public health risk impacts. The proposed project does not fall within any of the categories listed by the 2005 handbook. However, the 2005 handbook recommends that sensitive receptors should be located farther than 1,000 feet of a Distribution Center, where trucks, trailers, shipping containers, and other equipment with diesel engines produce diesel particulate matter emissions. Since most of the emissions from the proposed project are represented by exhaust gases and fugitive particulate matter generated by mobile sources, the sensitive receptors located within 1,000 feet of the proposed project were considered in order to assess the impacts.

The only sensitive receptors within 1,000 feet of the proposed project area are eight residences, located at distances ranging from 84 feet to 802 feet from the proposed project site, as summarized in Table 5.12-2. There are no schools, hospitals, or other sensitive land uses within 1,000 feet of the proposed project area.

5.3.2 Regulatory Setting

Federal

Clean Air Act

The Clean Air Act (CAA; United States Code Title 42, Chapter 85) is the law that defines the EPA's responsibilities for protecting and improving the nation's air quality and the stratospheric ozone layer. The last major change in the law, the CAA Amendments of 1990, was enacted by Congress in 1990. Legislation passed since then has resulted in several minor changes. Under the CAA, the EPA oversees implementation of federal programs for permitting new and modified stationary sources, controlling toxic air contaminants, and reducing emissions from motor vehicles and other mobile sources. The sections of the CAA that are most applicable to the proposed project are Title I (Air Pollution Prevention and Control), Title II (Emission Standards for Mobile Sources), and Title V (Permits).

Title I of the CAA requires establishment of NAAQS, air quality designations, and plan requirements for nonattainment areas. States are required to submit a state implementation plan (SIP) to the EPA for areas in nonattainment with NAAQS. The SIP, which is reviewed and approved by the EPA, must demonstrate how state and local regulatory agencies will institute rules, regulations, and/or other programs to achieve attainment with NAAQS. NAAQS are presented in Table 5.3-3.

Table 5.3-3 National and California Ambient Air Quality Standards

Pollutant	Averaging Time	California Standards[1], [2]	National Standards[3], [2]	
			Primary[4]	Secondary[5]
Ozone (O_3)	1-Hour	0.09 ppm (180 µg/m^3)	---[6]	---
	8-Hour	0.07 ppm (137 µg/m^3)	0.07 ppm (137 µg/m^3)	0.07 ppm (137 µg/m^3)
Carbon monoxide (CO)	1-Hour	20 ppm (23 mg/m^3)	35 ppm (40 mg/m^3)	---
	8-Hour	9.0 ppm (10 mg/m^3)	9 ppm (10 mg/m^3)	---
Nitrogen dioxide (NO_2)	1-Hour	0.18 ppm (339 µg/m^3)	0.1 ppm (188 µg/m^3)	---
	1-Year	0.03 ppm (57 µg/m^3)	0.053 ppm (100 µg/m^3)	0.053 ppm (100 µg/m^3)
Sulfur dioxide (SO_2)[7]	1-Hour	0.25 ppm (655 µg/m^3)	0.075 ppm (196 µg/m^3)	---
	3-Hour	---	---	0.5 ppm (1,300 µg/m^3)
	24-Hour	0.04 ppm (105 µg/m^3)	---	---
Respirable Particulate Matter (PM_{10})[8]	24-Hour	50 µg/m^3	150 µg/m^3	150 µg/m^3
	1-Year	20 µg/m^3	---	---
Fine Particulate Matter ($PM_{2.5}$)[8]	24-Hour	---	35 µg/m^3	35 µg/m^3
	1-Year	12 µg/m^3	12.0 µg/m^3	15 µg/m^3
Lead (Pb)	30-Day	1.5 µg/m^3	---	---
	Rolling 3-Month	---	0.15 µg/m^3	0.15 µg/m^3

Table 5.3-3 National and California Ambient Air Quality Standards

Pollutant	Averaging Time	California Standards[1], [2]	National Standards[3], [2]	
			Primary[4]	Secondary[5]
Hydrogen sulfide (H_2S)	1-Hour	0.03 ppm (42 µg/m^3)	No Federal Standards	
Sulfates (SO_4)	24-Hour	25 µg/m^3		
Visibility reducing particles	8-Hour	See Note 9		
Vinyl chloride[10]	24-Hour	0.01 ppm (26 µg/m^3)		

Source: CARB 2015b

Notes:

[1] CAAQS for ozone, CO (except 8-hour Lake Tahoe), SO_2 (1- and 24-hour), NO_2, PM_{10}, and visibility reducing particles, are values that are not to be exceeded. All others are not to be equaled or exceeded.

[2] Concentration expressed first in units in which it was promulgated. Parts per million in this table refers to ppm by volume or micromoles of pollutant per mole of gas.

[3] NAAQS (other than ozone, particulate matter, and standards based on annual averages or annual arithmetic mean) are not to be exceeded more than once a year. The ozone standard is attained when the fourth-highest 8-hour concentration in a year, averaged over 3 years, is equal to or less than the standard. For PM_{10}, the 24-hour standard is not to be exceeded more than once per year on average over 3 years. The 24-hour standard is attained when the 3-year average of the weighted annual mean at each monitor within an area does not exceed 150 µg/m^3. For $PM_{2.5}$, the 24-hour standard is attained when 98% of the daily concentrations, averaged over 3 years, do not exceed 35 µg/m^3. The annual standard is attained when the 3-year average of the weighted annual mean at single or multiple community-oriented monitors does not exceed 12 µg/m^3.

[4] National Primary Standards: The levels of air quality necessary, with an adequate margin of safety, to protect the public health.

[5] National Secondary Standards: The levels of air quality necessary to protect the public welfare from any known or anticipated adverse impacts of a pollutant.

[6] The federal 1-hour ozone standard was revoked for most areas of the United States, including all of California on June 15, 2005.

[7] Final rule signed June 2, 2010. The 1971 annual and 24-hour SO_2 standards were revoked in that same rulemaking.

[8] On December 14, 2012, the national annual $PM_{2.5}$ primary standard was lowered from 15 µg/m^3 to 12 µg/m^3. Existing national 24-hour $PM_{2.5}$ standards (primary and secondary) were retained at 35 µg/m^3, as was the annual secondary standard of 15 µg/m^3. The existing 24-hour PM_{10} standards (primary and secondary) of 150 µg/m^{3}also were retained. The form of the annual primary and secondary standards is the annual mean, averaged over 3 years.

[9] In 1989, CARB converted both the general statewide 10-mile visibility standard and the Lake Tahoe 30-mile visibility standard to instrumental equivalents, which are "extinction of 0.23 per kilometer" and "extinction of 0.07 per kilometer" for the statewide and Lake Tahoe Air Basin standards, respectively.

[10] CARB has identified lead and vinyl chloride as "toxic air contaminants" with no threshold level of exposure for adverse health impacts determined. These actions allow for the implementation of control measures at levels below the ambient concentrations specified for these pollutants.

Key:

CAAQS	California Ambient Air Quality Standards
CARB	California Air Resources Board
mg/m^3	milligrams per cubic meter
NAAQS	National Ambient Air Quality Standards
PM_{10}	particulate matter less than 10 microns in diameter
$PM_{2.5}$	particulate matter less than 2.5 microns in diameter
ppm	parts per million
µg/m^3	micrograms per cubic meter

Title II of the CAA contains a number of provisions regarding mobile sources, including requirements for reformulated gasoline, new tailpipe emission standards for cars and trucks, standards for heavy-duty vehicles, and a program for cleaner fleet vehicles.

National Emission Standard for Hazardous Air Pollutants

The CAA defines as hazardous air pollutants (HAPs) a variety of substances which pose serious health risks. Direct exposure to HAPs has been shown to cause cancer, reproductive effects or birth defects, damage to brain and nervous system, and respiratory disorders. Categories of sources that cause HAP

emissions are controlled through separate standards under CAA Section 112: National Emission Standards for Hazardous Air Pollutants (NESHAP). These standards are specifically designed to reduce the potency, persistence, or potential bioaccumulation of HAPs. Asbestos is a HAP regulated under the EPA NESHAP. The asbestos NESHAP is intended to provide protection from the release of asbestos fibers during activities involving the handling of asbestos. Air toxics regulations under the CAA specify work practices for asbestos to be followed during operations of demolitions and renovations. The regulations require a thorough inspection of the area where the demolition or renovation operations will occur and advance notification of the appropriate delegated entity. Work practice standards that control asbestos emissions must be implemented, such as removing, wetting, and sealing in leak-tight containers all asbestos-containing materials (ACM) and disposing of the waste as expediently as practicable.

State

California Clean Air Act

The California Clean Air Act outlines a statewide air pollution control program in California. CARB is the primary administrator of the California Clean Air Act, while local air quality districts administer air rules and regulations at the regional level. CARB is responsible for establishing the CAAQS, maintaining oversight authority in air quality planning, developing programs for reducing emissions from motor vehicles, developing air emission inventories, collecting air quality and meteorological data, and preparing the SIP. The CAAQS apply to the same criteria pollutants as the federal CAA and also include SO_4, visibility reducing particulates, H_2S, and vinyl chloride. They are generally more stringent than the federal standards. The CAAQS are presented in Table 5.3-3.

CARB is also responsible for regulations pertaining to TACs. The Air Toxics "Hot Spots" Information and Assessment Act was enacted in 1987 as a means to establish a formal air toxics emission inventory risk quantification program. Assembly Bill 2588, as amended, establishes a process that requires stationary sources to report the type and quantities of certain substances their facilities routinely emit.

Local

San Joaquin Valley Air Pollution Control District

The SJVAPCD implements air quality programs required by state and federal mandates, enforces rules and regulations based on air pollution laws, and educates businesses and residents about their roles in protecting air quality. The SJVAPCD is responsible for managing and permitting existing, new, and modified sources of air emissions within its boundaries, and has established rules and regulations that would apply to the proposed project to ensure compliance with local, state, and federal air quality regulations.

CEQA Guidance. The SJVAPCD developed the Guide for Assessing and Mitigating Air Quality Impacts (SJVAPCD 2015a) as an advisory document to provide lead agencies, consultants, and project applicants with uniform procedures for addressing air quality in environmental documents. The SJVAPCD also developed the Guide for Assessing and Mitigating Air Quality Impacts: Technical Document – Information for Preparing Air Quality Sections in EIRs (SJVAPCD 2002) as a companion document to the Guide for Assessing and Mitigating Air Quality Impacts.

Asbestos Program. Asbestos is a TAC (as defined by Title 17, California Code of Regulation, § 93000. Substances Identified As Toxic Air Contaminants). The SJVAPCD regulates ACM for demolition and renovations of regulated facilities. An Asbestos Notification form is required for any regulated demolition, whether or not asbestos is present, and for certain regulated renovations. A Demolition Permit Release form is required for all demolitions, including for facilities exempt from NESHAP.

Regulation VIII (Fugitive PM_{10} Prohibition). Regulation VIII contains rules developed pursuant to EPA guidance for serious PM_{10} nonattainment areas. Rules included under this regulation aim to reduce ambient concentration of PM_{10} by preventing, reducing, or mitigating fugitive dust emissions from construction sites during excavation, demolition, and other earthmoving activities; bulk material handling, storage, and transport; carryout and track-out; and driving in paved and unpaved vehicle and equipment traffic areas.

Extreme 1-hour Ozone Attainment Demonstration Plan. The Extreme Ozone Attainment Demonstration Plan was adopted by the SJVAPCD in 2004 and approved by the EPA in 2010. In 2012, the EPA withdrew its 2010 approval of the SJVAPCD's 2004 plan and required submittal of a new plan for the revoked 1-hour standard, which was adopted by SJVAPCD in 2013.

Eight-Hour Ozone Plan. The Eight-hour Ozone Plan was adopted by the SJVAPCD in 2007 and was approved by the EPA in 2012. This plan projects that the San Joaquin Valley will achieve the 8-hour ozone standard for all areas of the SJVAB no later than 2023.

PM_{10} Maintenance Plan. The PM_{10} Maintenance Plan and Request for Redesignation was adopted in 2007, following the EPA's finding that the SJVAB had attained the federal PM_{10} standards. The plan was approved by the EPA and in 2008 the SJVAB was re-designated to attainment for PM_{10} NAAQS.

$PM_{2.5}$ Attainment Plans. The San Joaquin Valley is designated as in nonattainment for federal $PM_{2.5}$ standards. The 2008 $PM_{2.5}$ Attainment Plan was adopted by the SJVAPCD to set out the strategy to attain the federal 1997 Annual $PM_{2.5}$ standard by 2015. Most of its provisions were approved by the EPA in 2012. The SJVAPCD 2012 $PM_{2.5}$ Attainment Plan is designed to achieve the federal 2006 24-hour $PM_{2.5}$ NAAQS by 2019. CARB approved this plan in 2013.

5.3.3 Environmental Impacts and Assessment

Applicant Proposed Measures

The applicant has incorporated the following applicant proposed measure (APM) into the proposed project to specifically minimize or avoid impacts on air quality. In addition, the applicant proposes implementation of APM GHG-1 to reduce emissions of criteria air pollutants and greenhouse gases. APM AIR-1 and APM GHG-1 would be implemented by PG&E as part of the proposed project. A list of all project APMs is included in Table 4-5.

> **APM AIR-1: Fugitive Dust Emissions Minimization.** Pursuant to SJVAPCD Regulation VIII, a Dust Control Plan would be prepared and submitted to the SJVAPCD for approval within the required timeframe prior to commencing construction activities. Based on the SJVAPCD *Guidance for Assessing and Mitigating Air Quality Impacts* (SJVAPCD 2015a), the following are examples of fugitive dust control measures that may be included in the Dust Control Plan to minimize dust emissions:
>
> 1. Apply water to unpaved surfaces and areas.
> 2. Use non-toxic chemical or organic dust suppressants on unpaved roads and traffic areas.
> 3. Limit or reduce vehicle speed on unpaved roads and traffic areas.
> 4. Maintain areas in a stabilized condition by restricting vehicle access.
> 5. Install wind barriers.
> 6. During high winds, cease outdoor activities that disturb the soil.

7. Keep bulk materials sufficiently wet when handling.
8. Store and handle loose materials that could create dust in a three-sided structure.
9. When storing bulk materials, apply water to the surface or cover the storage pile with a tarp.
10. Don't overload haul trucks. Overloaded trucks are likely to spill bulk materials.
11. Cover haul trucks with a tarp or other suitable cover; or, wet the top of the load enough to limit visible dust emissions.
12. Clean the interior of cargo compartments on emptied haul trucks prior to leaving a site.
13. Prevent trackout by installing a trackout control device.
14. Clean up trackout at least once a day. If along a busy road or highway, clean up trackout immediately.
15. Monitor dust-generating activities and implement appropriate measures for maximum dust control.

Impacts on Air Quality

Table 5.3-4 includes the significance criteria from Appendix G of the CEQA Guidelines' air quality section to evaluate the environmental impacts of the proposed project.

Table 5.3-4 Air Quality Checklist

Would the project:	Potentially Significant Impact	Less Than Significant with Mitigation Incorporation	Less Than Significant Impact	No Impact
a. Conflict with or obstruct implementation of the applicable air quality plan?	☐	☐	☒	☐
b. Violate any air quality standard or contribute substantially to an existing or projected air quality violation?	☐	☐	☒	☐
c. Result in a cumulatively considerable net increase of any criteria pollutant for which the project region is non-attainment under an applicable federal or state ambient air quality standard (including releasing emissions which exceed quantitative thresholds for ozone precursors)?	☐	☐	☒	☐
d. Expose sensitive receptors to substantial pollutant concentrations?	☐	☐	☒	☐
e. Create objectionable odors affecting a substantial number of people?	☐	☐	☒	☐

a. Would the project conflict with or obstruct implementation of the applicable air quality plan?

The SJVAPCD has adopted several attainment plans that outline the long-term strategies designed to achieve compliance with the NAAQS and CAAQS. The plans and the goals applicable to the proposed project are presented in Section 5.3-2 and include: the Extreme 1-hour Ozone Attainment Demonstration Plan (adopted 2013), the Eight-Hour Ozone Plan (adopted 2007), the PM_{10} Maintenance Plan (approved in 2008); and the $PM_{2.5}$ Attainment Plans (approved in 2013). The applicable plans are largely based on emission reductions, to be achieved through implementation of offset requirements. The thresholds of

significance for criteria pollutants were developed based on District Rule 2201 (New Source Review) offset requirements for stationary sources; emission levels below the thresholds of significance ensure that the offset requirements are fulfilled. The SJVAPCD Guide for Assessing and Mitigating Air Quality Impacts (2015a, par. 7.12, page 65) establishes that "[e]mission reductions achieved through implementation of District offset requirements are a major component of the District's air quality plans. Thus, projects with emissions below the thresholds of significance for criteria pollutants would be determined to 'Not conflict or obstruct implementation of the District's air quality plan.'" Therefore, the thresholds of significance for air quality described in the SJVAPCD Guide for Assessing and Mitigating Air Quality Impacts (SJVAPCD 2015a) were used to assess the significance of air quality impacts anticipated from the proposed project.

Construction

LESS THAN SIGNIFICANT IMPACT

Emissions of criteria pollutants would result from vehicle and equipment exhaust, as well as fugitive dust from travel, earthmoving, and site grading during construction of the proposed project. The installation of two dishes on the existing tower at the Fence Meadow Repeater Station would result in negligible emissions from vehicle travel (up to two trucks and one crane round trip per day). Some travel would occur on unpaved roads, resulting in negligible fugitive dust, but there would be no ground-disturbing activities that would generate fugitive dust. Construction emissions estimates before mitigation, namely without implementation of APM AIR-1, along with the thresholds of significance for criteria pollutants emitted during construction, are provided in Table 5.3-5. Detailed calculations are provided in Appendix C.

Table 5.3-5 Estimated Unmitigated Criteria Pollutant Emissions during Construction

Criteria Emissions	Daily Maximum lbs/day	Total		
		Project Total Tons[1]	Applicable Construction Threshold[2] Tons/Year	Threshold Exceeded?
Volatile Organic Compounds (VOCs)	9.5	0.7	10	No
Carbon Monoxide (CO)	75.7	5.6	100	No
Oxides of Nitrogen (NO_X as NO_2)	96.3	6.4	10	No
Sulfur Dioxide (SO_X as SO_2)	0.1	<0.1	27	No
Particulates (PM_{10})	6.9	0.6	15	No
Particulates ($PM_{2.5}$)	5.2	0.4	15	No

Notes:

[1] Emissions are for the entire 24 to 30 months of proposed project construction. Using this figure makes the analysis conservative since the significance threshold is a yearly threshold.

[2] SJVAPCD 2015a

Key:

lbs	pounds
NO_2	nitrogen dioxide
PM_{10}	particulate matter less than 10 microns in diameter
$PM_{2.5}$	particulate matter less than 2.5 microns in diameter
SO_X	oxides of sulfur

The project construction emissions reported in Table 5.3-5 are all below the thresholds of significance and, therefore, the project would not conflict with or obstruct implementation of the applicable air quality plan.

APM AIR-1 would require preparation and implementation of a Dust Control Plan. Implementation of APM AIR-1 would further reduce fugitive dust emissions from construction activities. The emission reduction efficiency of the control measures included in the dust control plan range from about 10 percent for covering all trucks hauling, dirt, sand, soil or other loose materials, up to 70 percent and above for stabilizing and watering unpaved areas and enforcing the traffic speed limits (SCAQMD 2006). Impacts would remain less than significant.

SJVAPCD Regulation VIII contains rules developed pursuant to EPA guidance for serious PM_{10} nonattainment areas, such as the project area. Regulation VIII requires that, when the areas disturbed by construction activities are larger than 1 acre, a dust control plan must be prepared. Since the total amount of area disturbed during construction of the proposed project would be approximately 18 acres, the proposed project would require a dust control plan to identify the fugitive dust sources and the dust control measures to be implemented before, during, and after any dust generating activity for the duration of the project.

Operation and Maintenance

NO IMPACT

In general, operation of a project could obstruct implementation of an applicable air quality plan if it resulted in population or employment growth beyond what is allowed for in the plan, neither of which would occur as a result of the proposed project. The vehicle trips and maintenance activities for the proposed project would be comparable to the current level of vehicle trips and maintenance activities. The expanded substation would be unstaffed, would require no new permanent employees, and would not cause an increase in population. The proposed project would provide added capacity as required to meet the projected growth of the area but would not directly or indirectly induce growth.

Operation and maintenance emissions would be about the same as current emissions and, therefore, there would be no impacts associated with the proposed project. Emissions from operations and maintenance activities are expected to be below those estimated for construction activities; therefore, emissions would not exceed the SJVAPCD thresholds set forth in Table 5.3-5.

The proposed project therefore would not conflict with or obstruct implementation of any of the SJVAPCD's air quality plans. There would be no impact.

b. Would the project violate any air quality standard or contribute substantially to an existing or projected air quality violation?

Construction

LESS THAN SIGNIFICANT IMPACT

The thresholds of significance for air quality described in the SJVAPCD Guide for Assessing and Mitigating Air Quality Impacts (SJVAPCD 2015a) were used to assess whether emissions from the project construction would violate any air quality standard or contribute substantially to an existing or projected air quality violation. These thresholds are the same as utilized for criterion (a) (and set forth in Table 5.3-5). As described under criterion (a), emissions of criteria pollutants would not contribute to an ongoing violation or cause a violation of the NAAQS or CAAQS because emissions would not exceed the air quality thresholds and impacts would be less than significant.

Operation and Maintenance

NO IMPACT

The vehicle trips and maintenance activities for the proposed project would be comparable to the current level of vehicle trips and maintenance activities. The expanded substation would be unstaffed, as it is currently. There would be no impacts to air quality during operation and maintenance because there would be no change in emissions over emissions associated with current operation and maintenance activities.

c. Would the project result in a cumulatively considerable net increase of any criteria pollutant for which the project region is non-attainment under an applicable federal or state ambient air quality standard (including releasing emissions which exceed quantitative thresholds for ozone precursors)?

Construction

LESS THAN SIGNIFICANT IMPACT

The proposed project area is in nonattainment of NAAQS for O_3 and $PM_{2.5}$, and nonattainment of CAAQS for O_3, PM_{10}, and $PM_{2.5}$. As discussed for significance criterion (b), impacts would be less than significant for O_3 and $PM_{2.5}$, and for PM_{10} even before implementation of APM AIR-1, which would further reduce the proposed project's fugitive dust emissions. Construction of the proposed project would not result in a cumulatively considerable net increase of any criteria pollutant for which the region is in non-attainment.

Operation and Maintenance

NO IMPACT

The vehicle trips and maintenance activities for the proposed project would be comparable to the current level of vehicle trips and maintenance activities. The expanded substation would be unstaffed, as it is currently. Operation and maintenance emissions would be about the same as current emissions. There would be no impact.

d. Would the project expose sensitive receptors to substantial pollutant concentrations?

Construction

LESS THAN SIGNIFICANT IMPACT

Sensitive receptors within 1,000 feet of the proposed project area are limited to residences located at distances ranging from 84 feet to 802 feet from the proposed project site, as summarized in Table 5.12-2.

The SJVAPCD significance thresholds for TACs, including carcinogens and non-carcinogens, are (SJVAPCD undated):

- Carcinogens: Maximally Exposed Individual risk equals or exceeds 10 in one million.
- Non-Carcinogens - Acute: Hazard Index equals or exceeds 1 for the Maximally Exposed Individual.
- Non-Carcinogens - Chronic: Hazard Index equals or exceeds 1 for the Maximally Exposed Individual.

The significance thresholds are based on the relationship between exposure to a substance (dose) and occurrence of injury (response). For carcinogens, dose-response assessment is based on the risk of developing cancer per unit of average daily dose over a 70-year lifetime. For non-carcinogens, dose-response information is used to determine Reference Exposure Levels (REL). The non-carcinogen acute RELs are estimated assuming infrequent 1-hour exposures. The non-carcinogen chronic RELs are estimated assuming 24-hour per day exposures for at least a significant fraction of a lifetime, defined as about 8 years (OEHHA 2015a).

During construction of the proposed project, sensitive receptors near the construction sites would be exposed to particulate emissions from diesel-fueled engines and to asbestos, which are identified as TACs. Construction would be temporary, which would reduce the exposure to TACs caused by the proposed project. Because of the relatively short timeframe of construction activities (about 24 to 30 months) compared to the reference exposure times for cancer risk and chronic effects, the increased cancer risk and the non-cancer chronic hazard index from exposure to construction activities would be below the SJVAPCD significance thresholds.

OEHHA (2015b) recommends evaluation of non-cancer acute health effects from exposure to diesel exhausts only for "certain unusual situations," such as a receptor located above the emission release point (e.g., on a hillside or in a multistory apartment building). The recommendations in OEHHA (2015b) are provided as guidance for the Air Toxic Hot Spots Program, which regulates toxic air emissions from stationary sources. The proposed project would not cause continuous direct exposure of receptors to the exhausts emitted by a stationary source (and related health effects) because it would only include mobile sources and construction equipment, which have much lower emission levels compared to stationary sources. Therefore, non-cancer acute hazard index from exposure to diesel exhausts would also be below the SJVAPCD significance threshold.

Asbestos could be found during demolition of transmission poles and towers if it is contained in the infrastructure. Removal or relocation of utility lines requires notification to the SJVAPCD, an asbestos survey conducted by a Certified Asbestos Inspector, and applicable removal and disposal requirements of identified ACM (NESHAP 40 Code of Federal Regulations 61, Subpart M). Compliance with applicable regulations would ensure that asbestos air quality impacts would be less than significant.

The proposed project would not expose sensitive receptors to substantial pollutant concentrations during construction. Impacts would be less than significant.

Operation and Maintenance

NO IMPACT

The vehicle trips and maintenance activities for the proposed project would be comparable to the current level of vehicle trips and maintenance activities. The expanded substation would be unstaffed, as it is currently. Operation and maintenance emissions would be about the same as current emissions. Therefore, the proposed project would not expose sensitive receptors to substantial pollutant concentrations during operation and maintenance. There would be no impact.

e. Would the project create objectionable odors affecting a substantial number of people?

Construction

LESS THAN SIGNIFICANT IMPACT

During construction, potential sources of odors would be represented by diesel exhausts and hydrocarbon emissions from equipment use.

According to a study conducted by Colucci and Barnes (1970), perception of diesel exhaust emission averaged about 29 feet for an idling bus and about 36 feet for an accelerating bus. Engines in buses are comparable to engines in heavy equipment, suggesting a similar perception related to diesel exhaust from project equipment. Odors from newer equipment are likely to travel an even lower distance due to improvement in technologies since the time of this study.

As shown in Table 5.12-2, the closest sensitive receptor to a staging area would be located at a distance of about 84 feet. All other sensitive receptors would be more than 84 feet from the project components. Therefore, objectionable odors from construction activities are not expected to affect a substantial number of people and would not result in a significant impact. Impacts would be less than significant.

Operation and Maintenance

NO IMPACT

The vehicle trips and maintenance activities for the proposed project would be comparable to the current level of vehicle trips and maintenance activities. The expanded substation would be unstaffed, as it is currently. There are currently no odors associated with operation and maintenance; odors from operation and maintenance activities would be the same as baseline. There would be no impact.

This page intentionally left blank.

5.4 Biological Resources

This section describes the environmental and regulatory setting and discusses impacts associated with the construction and operation of the Sanger Substation Expansion Project (proposed project) proposed by Pacific Gas and Electric Company (PG&E, or the applicant) with respect to biological resources.

5.4.1 Environmental and Regulatory Setting

The proposed expansion of the Sanger Substation would be located directly north of the existing Sanger Substation, with a small portion located adjacent to and west of the existing substation. The proposed expansion would be sited on land that is currently used for agriculture. The proposed transmission line work would occur within approximately 0.5 miles of the existing substation boundary. The area surrounding the Sanger Substation is primarily agricultural, dominated by vineyards and row crops with a few trees interspersed.

PG&E would mount two dishes, each measuring about 4 feet in diameter, on an existing tower at the Fence Meadow Repeater Station in the Sierra National Forest as part of the proposed project. No ground disturbance would occur as a result of the installation, and no additional tall structures would be installed. Existing roads would be used to access the site. There would be no impacts to biological resources as a result of work on the proposed project at the Fence Meadow Repeater Station. As a result, the antenna system at the Fence Meadow Repeater Station is not further discussed in this section.

Methodology

Literature Review

The California Public Utilities Commission (CPUC) conducted a literature review to identify biological resources in the project area. The CPUC reviewed the following information on biological resources:

- A California Natural Diversity Database (CNDDB) records search of a 10-mile radius around the project site (CDFW 2015a) for the following United States Geological Society 7.5-minute quadrangles: Sanger, Malaga, Wahtoke, Piedra, Round Mountain, Clovis, Fresno North, Fresno South, Conejo, Selma, and Reedley;
- The California Native Plant Society's (CNPS's) 2015 online *Inventory of Rare and Endangered Plants of California* for Fresno County (CNPS 2015);
- A U.S. Fish and Wildlife Service (USFWS) list of endangered, threatened, or proposed species for Fresno County (USFWS 2015a);
- USFWS Information for Planning and Conservation (IPaC) Resource Report for 10 square miles around the proposed project site (USFWS 2015b);
- Soil maps (NRCS 2015);
- California Department of Fish and Wildlife's (CDFW's) List of Vegetation Alliances and Associations (CDFW 2010);
- CDFW Threatened and Endangered Species Lists and Accounts (CDFW 2015b);
- A Manual of California Vegetation (CNPS 2016);
- eBird, an online database of bird distribution and abundance (eBird 2016);
- Aerial photographs (Google Earth 2016);
- Jepson Manual: Vascular Plants of California (Jepson Flora Project 2016); and

- PG&E's Proponent's Environmental Assessment (PG&E 2015) and Biological Resources Technical Report (NSR 2015) for the proposed project.

Biological Surveys

North State Resources, Inc., the applicant's consultant, conducted field reconnaissance surveys on March 30, 2012, and April 14, 2015 (NSR 2015). The surveys entailed walking meandering transects in the biological resources survey area, which included all areas within a 250- to 400-foot radius of the proposed project (Figure 5.4-1). Habitat types and plant communities were characterized within the survey area and then evaluated to determine habitat suitability for special status plants and animals. In addition, the survey area was searched for special status plant and animal species or signs of them (e.g., scat) and for any nesting birds and raptors; an additional 0.5 miles outside the survey area was also searched by vehicle for raptors. Protocol-level rare plant surveys were not conducted because the survey area contains little native vegetation and does not fit the protocol's criteria (CDFW 2009).

During field surveys, an assessment for potential waters of the United States as defined by Section 404 of the Clean Water Act (CWA) within the survey area was conducted, and it was determined that there are no features within the project area that would be considered potentially jurisdictional by the United States Army Corps of Engineers, Regional Water Quality Control Board, or CDFW. In addition to the applicant's surveys, general biological information was also collected by the CPUC's qualified professionals during a site visit to the proposed project location in February 2016 (Vick 2016).

Agency Consultation

CPUC's environmental consultant informally contacted USFWS and CDFW. USFWS did not provide comments. CDFW responded with several comments (Bahm pers. comm. 2016):

- Recommended general pre-activity/construction surveys for San Joaquin kit fox, their sign, and potential dens within 7 days prior to work commencing. Potential dens should be avoided by 50 feet, known dens by 100 feet, and natal den avoidance should be determined on a case-by-case basis in coordination with CDFW and USFWS.
- Recommended including bat species if there are any natural and/or man-made structures in the project area.
- Provided additional information regarding suggested Worker Environmental Awareness Plan (WEAP) training protocols.
- Recommended a detailed nesting bird mitigation measure rather than a nesting bird management plan.
- Suggested minimum buffer distance recommendations for birds.

Regulatory Setting

Federal

Federal Endangered Species Act (ESA)

The federal ESA of 1973 conserves plants and animals that are listed by the federal government as "endangered" or "threatened" and the ecosystems upon which they depend. Section 9 of the ESA prohibits the "take" of listed fish and wildlife. "Take" is defined as "harass, harm, pursue, hunt, shoot, wound, trap, capture, collect, or attempt to engage in such conduct" (50 Code of Federal Regulations [CFR] 17.3). It is also unlawful to remove, cut, dig up, damage or destroy listed plant species from areas

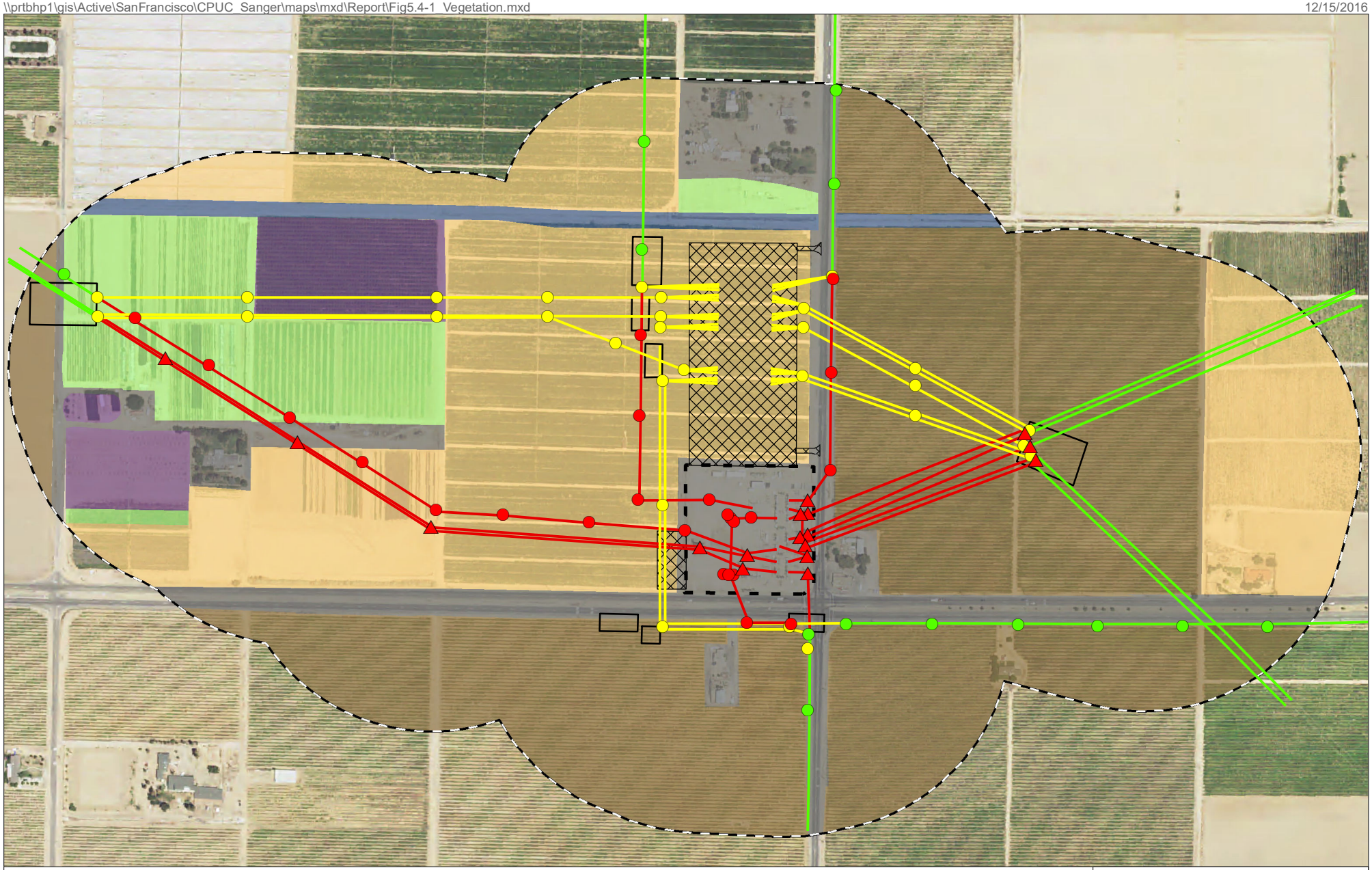

Sources:
CA DOC 2012, 2014; PG&E 2015, 2016
Basemap: NAIP 2014

Figure 5.4-1
Vegetation and Land Cover Types
Sanger Substation
Fresno County, CA

under federal jurisdiction, or in knowing violation of state law or regulations without a permit. Provisions under the federal ESA allow USFWS to authorize "incidental" take of listed species occurring as a result of otherwise lawful activities under certain terms and conditions. Although incidental take is not anticipated for the proposed project, PG&E would consult under Section 10 of the ESA if an incidental take permit is needed. Under Section 10, a private party initiates consultation with USFWS to discuss target species in the area, the private party prepares a Habitat Conservation Plan (HCP) to assess the potential for the project to impact these species, and presents measures to minimize these impacts.

PG&E San Joaquin Valley Operations and Maintenance Habitat Conservation Plan

PG&E has an HCP, which has been approved by USFWS, for routine operations and maintenance (O&M) in nine counties in the San Joaquin Valley, including Fresno County. The HCP authorizes PG&E's incidental take of 23 wildlife and 42 plant special status species for 33 routine O&M activities. The proposed project is within the plan area, but construction of the proposed project is not a covered plan activity. However, once construction of the proposed project is completed, its routine O&M activities would be covered activities (Jones & Stokes 2006).

Migratory Bird Treaty Act

The Migratory Bird Treaty Act (MBTA) of 1918 (16 United States Code Sections 703-712) protects all migratory birds listed in 50 CFR 10.13, including active nests and eggs. The MBTA makes it unlawful to pursue, hunt, take, capture, kill, possess, or sell birds listed under the MBTA without the appropriate permits. Birds protected under the MBTA include all native waterfowl, shorebirds, hawks, eagles, owls, doves, and other common birds such as ravens, crows, sparrows, finches, and others, including their body parts (feathers and plumes), nests, and eggs.

Clean Water Act Sections 401 and 404

The CWA regulates restoration and maintenance of the chemical, physical, and biological integrity of the nation's water. The definition of "waters of the United States" includes rivers, streams, estuaries, the territorial seas, ponds, lakes, and wetlands. Section 404 of the CWA regulates the discharge of dredge-and-fill material into waters of the United States, including wetlands. Section 401 of the CWA requires a State Water Quality Certification (or waiver thereof) for activities that require a U.S. Army Corps of Engineers Section 404 permit, to ensure consistency with state water quality standards.

United States Forest Service Sierra National Forest Land and Resource Management Plan

Two dishes would be installed on an existing tower at the Fence Meadow Repeater Station, which is on land managed by the U.S. Forest Service; there would be no impacts from this work. The Sierra National Forest Land and Resource Management Plan includes management directions for protection of sensitive species and their habitat (USFS 1991). The plan protects nests and dens of all sensitive wildlife species until young are gone and requires management activities occur in a way to preserve nests and dens.

State

California Endangered Species Act (CESA)

The CESA is similar to the federal ESA and is administered by the CDFW under California Fish and Game Code (CFGC) Section 2050 et seq. The CESA, as amended, protects endangered and threatened species and their habitats, and prohibits the take of CESA-listed species. The state definition of "take" is to hunt, pursue, catch, capture, or kill a member of a listed species or attempt to do so (Fish and Game Code Section 86). CDFW administers CESA and authorizes take through permits or memorandums of understanding issued under Section 2081 of CFGC, or through a consistency determination issued under

section 2080.1. Under the CESA, endangered, rare, or threatened species are those listed in Sections 670.2 (plants), and 670.5 (animals), Title 14, California Code of Regulations. The protections of the CESA also apply to species designated as candidate species.

Stream Protection (CFGC Sections 1600–1616)

The CDFW regulates activities that would interfere with the natural flow of or substantially alter the channel, bed, or bank of a lake, river, or stream. These activities are regulated under CFGC Sections 1600 to 1616 and require a Lake or Streambed Alteration Agreement (LSAA). Requirements to protect the integrity of biological resources and water quality are often conditions of LSAAs.

Fully Protected Species (CFGC Sections 3511, 4700, 5050, and 5515)

CFGC designates certain animal species as "fully protected" under Sections 3511 (birds), 4700 (mammals), 5050 (reptiles and amphibians), and 5515 (fish). Take of fully protected species may be for "scientific research"; incidental take of fully protected species may be authorized through an approved Natural Community Conservation Plan (CFGC Section 2835).

Protection for Birds (CFGC Sections 3503, 3503.5, 3513)

CFGC Section 3503 states that "it is unlawful to take, possess, or needlessly destroy the nest or eggs of any bird, except as otherwise provided by this code or any regulation made pursuant thereto." Section 3503.5 states that it is "unlawful to take, possess, or destroy any birds in the orders of Falconiformes or Strigiformes (birds of prey) or to take, possess, or destroy the nest or eggs of any such bird." CDFW generally considers disturbance that results in the incidental loss of fertile eggs or nestlings, or otherwise leads to nest abandonment and/or loss of reproductive effort to be "take." Section 3513 provides for consistency with regulations that implement the MBTA.

California Species of Special Concern

Species of Special Concern is a category used by CDFW to identify fish and wildlife species that meet the state definition of threatened or endangered, but have not been formally listed (e.g., federally or state-listed species), or are considered at risk of qualifying for threatened or endangered status in the future based on known threats. Species of Special Concern is an administrative classification only, but these species should be considered "special-status" for the purposes of the California Environmental Quality Act analysis (see the Significance Criteria section of this document).

California Native Plant Protection Act of 1977 (CFGC Sections 1900–1913, 2062, and 2067)

The California Native Plant Protection Act identifies the types of plant species eligible for state listing. Eligible species include those identified on CNPS Rare Plant Ranks 1A, 1B, and 2, and meet the definitions of Sections 1901, Chapter 10 (Native Plant Protection Act). Under California Fish and Game Code Section 2062, any plant species determined by the CFGC (Commission) as "endangered" on or before January 1, 1985 is an endangered species under CESA and under Section 2067 any plant species determined by the Commission as "rare" is a "threatened species" under CESA.

Porter–Cologne Water Quality Control Act

Article 4 of the Porter-Cologne Water Quality Control Act (California Water Code Section 13260 et seq.) states that discharge of waste in an area that could affect Waters of the State requires filing a report of discharge with the Regional Water Quality Control Board. Waters of the State include surface water and groundwater in the state. Dischargers must obtain Waste Discharge Requirements. If waters are also

Waters of the U.S., then the Waste Discharge Requirement is covered by the section 401 Water Quality Certification, discussed above under the CWA.

Local

Fresno County General Plan

The Fresno County General Plan was created to meet state general plan requirements and "is a comprehensive, long-term framework for the protection of the county's agriculture, natural, and cultural resources and for development in the county" (Fresno County 2000). In particular, the Open Space and Conservation Element is "concerned with protecting and preserving natural resources, preserving open space areas, managing the production of commodity resources, protecting and enhancing cultural resources, and providing recreational opportunities." Section E focuses on Fish and Wildlife Habitat and states:

- ***Policy OS-E.9:*** *Prior to approval of discretionary development permits, the County shall require, as part of any required environmental review process, a biological resources evaluation of the project site by a qualified biologist. The evaluation shall be based upon field reconnaissance performed at the appropriate time of year to determine the presence or absence of significant resources and/or special-status plant or animals. Such evaluation will consider the potential for significant impact on these resources and will either identify feasible mitigation measures or indicate why mitigation is not feasible.*

Vegetation and Wildlife Habitats

Agriculture is the primary land use in the survey area, consisting of row crops and vineyards. The heavy land modification from agriculture has resulted in relatively little native vegetation in the survey area. Several vegetation and ground cover categories were identified during the field surveys (Table 5.4-1, Figure 5.4-1). None of these are considered special status natural communities (CDFW 2010). There is no USFWS-designated critical habitat for special status species in the survey area (USFWS 2015b).

Table 5.4-1 Approximate Extent of Vegetation and Other Land Cover Types within the Survey Area

Vegetation and Land Cover Types	Area (acres)
Vineyards	77.8
Row Crops	63.9
Urban/Semi-urban	27.4
Specialty Crops/Greenhouse	17.1
Orchards	8.5
Agriculture Irrigation Ditch	3.8

Vineyards

Vineyards are found in the eastern and southern portions of the survey area, with a small additional portion of vineyards on the western edge. These vineyards are intensively farmed and leave very little vegetation between rows. In a few areas, ground cover was found to contain non-native species, including Mediterranean barley (*Hordeum marinum*), ripgut brome (*Bromus diandrus*), common burclover (*Medicago polymorpha*), and redstem stork's bill (*Erodium cicutarium*).

Row Crops

The area directly north and west of the existing substation is made up of row crops. Row crops are also found in the fringes of the northern, western, and eastern boundaries of the survey area. The proposed expansion area is located entirely within land planted with row crops. At the time of the March 30, 2012 survey and the February 2016 site visit, the proposed expansion area was mostly disked; however, during

the April 14, 2015 survey, the proposed expansion area was predominately planted with squash. Along the edges of row crops and access roads, non-native grasses and forbs were found sporadically, including bermudagrass (*Cynodon dactylon*) and shepherd's purse (*Capsella bursa-pastoris*), as well as native species such as fiddleneck (*Amsinckia* sp.).

Urban/Semi-urban

Within the survey area, the existing Sanger Substation, as well as a few isolated residences, make up the urban/semi-urban category. There is agriculture infrastructure within the survey area as well, but all of these areas are largely unvegetated, with the exception of a few ornamental trees.

Specialty Crops/Greenhouses

In the northwestern portion of the survey area, and in a small area between the irrigation ditch and an urban area, there are specialty crops and greenhouse structures. The crops include Chinese broccoli, Chinese spinach, kohlrabi, lemongrass, sugar peas, peppers, cucumbers, yams, and lettuce. This area is intensively farmed.

Orchards

In the northwest portion of the survey area, just south of the irrigation ditch, there is a young plum orchard. In the western portion of the survey area, there are two young orchards situated between a residence and South Thompson Avenue. The surrounding soil is well maintained, with few occurrences of the non-native plants and weeds under row crops.

Agriculture Irrigation Ditch

An actively managed agriculture irrigation ditch is located in the northern portion of the survey area and approximately 80 feet north of the proposed northern boundary of the expanded substation footprint. There is a semi-paved access road that runs parallel between the south side of the ditch and the proposed project. There is a levee of approximately 3 feet high on either side of the ditch, which regulates water levels. The ditch and the levee are regularly maintained by mechanically clearing them of vegetation. The levee is also cleared using chemicals. The bottom of the ditch was found to have sparse vegetation, including natives smartweed (*Polygonum lapathifolium*) and fringed willowherb (*Epilobium ciliatum*), and non-natives white sweetclover (*Melilotus alba*), bermudagrass, shepherd's purse, and redstem stork's bill. The steep banks of the ditch, which were largely clear of vegetation during both surveys, contained sporadic patches of non-native vegetation, including mouse-tail (*Festuca bromoides*), Canada horseweed (*Erigeron canadensis*), common mallow (*Malva neglecta*), and ripgut brome.

Special Status Species

Special status species include plants and animals that are either formally listed under federal or state endangered species law, or not formally listed but which, in the judgement of the CPUC's qualified professionals, meet the definitions of "Endangered" or "Rare" under California Environmental Quality Act Guidelines Section 15380, such as species considered to be rare by resource agencies, professional organizations (e.g., CNPS), local ordinances, and the scientific community. In this document "special status species" include species listed as Endangered, Threatened, Candidate, or Proposed under the Federal ESA; listed as Endangered, Threatened, or Rare under CESA; designated as Watch List, Fully Protected, or Species of Special Concern or listed under the California Native Plant Protection Act by CDFW; USFWS Birds of Conservation Concern; or CNPS Rare Plant Ranks 1-4.

The potential for special status species to occur within the proposed project area was assessed using the data sources and survey results described in above. The species that have potential to occur in the project area based on the above definitions for low, moderate, and high potential are described in Table 5.4-2.

The likelihood of each special status species occurrence in the project area was determined based on known occurrences and natural history parameters, including but not limited to the species' range, habitat, foraging needs, migration routes, and reproductive requirements according to the following categories:

High: CNDDB or other documentation of occurrence of the species within a 3-mile radius of the project area. Suitable habitat for foraging and/or breeding is present within the project area.

Moderate: CNDDB or other documentation of occurrence of the species between a 3- and 5-mile radius of the project area. Suitable habitat for foraging and/or breeding is present within the project area.

Low: CNDDB or other documentation within 10 miles of the project area, but limited suitable habitat or poor quality habitat for foraging and/or breeding is present within the project area; or there are no CNDDB or other records within 10 miles of the project area, but known suitable habitat for foraging and/or breeding is present within the project area.

Table 5.4-2 Special Status Wildlife Species with Potential to Occur within Project Area

Common and Scientific Names	Status Federal/State[a]	Habitat Requirements[b]	Potential Occurrence in Project Area[c]
Birds			
Burrowing owl *(Athene cunicularia)*	—/SSC	Level, open, dry, heavily grazed, or low stature grassland or desert vegetation with available burrows. Can excavate their own burrows, but often use ground squirrel, fox, or badger burrows or dens. During breeding season, will typically forage near their burrows, but have been reported 2.7 kilometers away.	Low: CNDDB occurrence 8 miles north-northeast of the town of Sanger in 2006 in open non-native grassland habitat. Four observations on eBird, three of which were at the same point approximately 8 miles from the project area from 2011 to 2015. The other location was approximately 7.5 miles from the project area in 2015. Suitable habitat in terms of burrows (the irrigation ditch) and foraging occurs in survey area. No evidence of burrowing owl or burrowing owl sign (white wash, pellets, feathers, etc.), and limited prey were observed during reconnaissance field surveys.
Loggerhead shrike (*Lanius ludovicanus*)	—/SSC	Forages in open grassland habitats throughout the Central Valley of California. Nests in shrubs and trees. Generally requires thorny trees or shrubs, or barbed-wire fences, which it uses to help store and tear apart larger prey.	Low: No CNDDB occurrence within 10 miles. Fifteen eBird observations at eight locations 5 to 9 miles from the project area from 2000 to 2016. Limited habitat is present in the form of marginal quality foraging habitat within and adjacent to project site and minimal shrubs for nesting. Barbed-wire fencing present.
Swainson's hawk *(Buteo swainsoni)*	—/T	Nests in oaks or cottonwoods in or near riparian habitats, will utilize lone trees in agricultural fields. Forages in grasslands, irrigated pastures, and grain fields. Sometimes utilizes man-made structures, such as power poles, for nesting.	Moderate: Last CNDDB recorded sighting within a 10-mile radius of project location in 1956. One eBird observation 3.5 miles from project area in 2015. Three more eBird observation 6 to 8 miles from project area between 2004 and 2015. Suitable habitat is present in the form of foraging habitat and potential nesting sites within 0.5 miles of the project area.

Table 5.4-2 Special Status Wildlife Species with Potential to Occur within Project Area

Common and Scientific Names	Status Federal/State[a]	Habitat Requirements[b]	Potential Occurrence in Project Area[c]
White-tailed kite (*Elanus leucurus*)	—/FP	Nests in dense tree stands, forages in grasslands, agriculture fields and marshes. Uses trees with dense canopies for cover. Nests located near open foraging area.	Low: No CNDDB occurrences within 10 miles. Four eBird observations in a 3- to 5-mile radius of the project area in 2013 and 2014 and 22 observations within a 5- to 10-mile radius between 2000 and 2015. Limited foraging habitat within and adjacent to the project area; no dense canopies for potential nesting sites within 1 mile of project area.
Mammals			
Pallid Bat (*Antrozous pallidus*)	—/SSC	Daytime roosts in caves and crevices, and occasionally in buildings and hollow trees. Range includes low elevations throughout California. Roosts must protect bat from high temperatures.	Low: No reported observations within a 10-mile radius of the project area. Poor quality habitat is present in the form of isolated tree stands and buildings.
San Joaquin kit fox *(Vulpes macrotis mutica)*	E/T	Open habitats in deserts and grasslands, dens in open, level areas with loose textured soils. Denning sites may be found in agricultural and urban areas associated with fallowed areas or areas of natural vegetation.	Low: Last CNDDB occurrence within 10 miles was in 1980 with a location represented as "Sanger" (no specific coordinates provided). Because of heavily modified agricultural lands, limited habitat is located within 1.5 miles and limited amount of prey is present in the area. No known denning habitat in survey area.
Western red bat (*Lasiurus blossevillii)*	—/SSC	Roosts primarily in trees that are in edge habitats adjacent to streams, fields, or urban areas. Preferred roost sites are protected from above and open below to minimize water loss.	Low: No reported observations within a 10-mile radius of the project area. Poor quality habitat is present in the form of isolated tree stands.

Notes:

[a] Status explanations:

Federal

E listed as endangered under the federal Endangered Species Act.

State

T listed as threatened under the California Endangered Species Act.

FP fully protected under the California Fish and Game Code.

SSC species of special concern in California.

[b] As reported in the 2015 CDFW Threatened and Endangered Species Lists and Accounts (CDFW 2015b), California Wildlife Habitat Relationships (CDFW 2000b, 2005, Undated a, Undated b), Shuford and Gardali (2008), and 2015 USFWS Endangered Species List (USFWS 2015a),

[c] Potential Occurrence in the Project Area

Moderate: CNDDB or other documentation of occurrence of the species between a 3- and 5-mile radius of the project area. Suitable habitat for foraging and/or breeding is present within the project area.

Low: CNDDB or other documentation within 10 miles of the project area, but limited suitable habitat or poor quality habitat for foraging and/or breeding is present within the project area; or there are no CNDDB or other records within 10 miles of the project area, but known suitable habitat for foraging and/or breeding is present within the project area.

Key:

CNDDB California Natural Diversity Database

1

A number of plant and wildlife species identified in the literature review were determined to have no potential to occur within the project area because no CNDDB records or other documentation within 10 miles of the project area were found, or suitable habitat is not present in the project area in any condition. Species with no potential to occur were not included in this document.

5.4.2 Environmental Impacts and Assessment

Applicant Proposed Measures

The applicant has incorporated applicant-proposed measures (APMs) into the proposed project to minimize or avoid impacts on biological resources. Not all APMs were applied to reduce impacts; however, APMs BIO-1, BIO-2, BIO-3, BIO-6, BIO-7, and BIO-8 were not applied in the analysis to determine whether and to what extent impacts to biological resources would be reduced because no impacts were identified that could be minimized through application of these APMs. Nonetheless, these APMs would be implemented by PG&E because they are considered to be part of the proposed project. A list of all project APMs is included in Table 4-5.

APM BIO-1: Work area minimization. The number of access routes, staging areas, and total area of the work sites will be kept to the minimum necessary.

APM BIO-2: Erosion and sediment control measures. A Stormwater Pollution Prevention Plan (SWPPP) will be implemented to ensure effective erosion and sediment control measures will be in place at all times during construction.

APM BIO-3: Weed management. To prevent the spread of noxious weeds, only equipment which has been washed and is free of caked on mud, dirt, and other debris, which could house plant seeds, will be allowed in the project area.

APM BIO-4: Avoidance of impacts to wildlife and natural habitats. All work will be done in a manner that minimizes disturbance to wildlife and habitat.

APM BIO-5: Litter and trash management. All food waste and associated containers will be disposed of in closed lid containers.

APM BIO-6: Maintenance and refueling. No vehicle maintenance or refueling will occur within 100 feet of the agricultural irrigation ditch located near the north boundary of the project footprint.

APM BIO-7: Spill prevention and cleanup. Proper spill prevention and cleanup equipment will be readily available.

APM BIO-8: Route limitations. Vehicles will remain on designated access roads and within designated worksites.

APM BIO-9: Pets and firearms. No pets or firearms are permitted within the project area.

APM BIO-10: Vehicle speed limits. Construction crews will abide all County road speed limits.

APM BIO-11: Backfilling. Prior to backfilling or placement of structures, all excavation sites (e.g., holes excavated for pole butts, trenches, etc.) will be inspected to ensure no small vertebrates have been entrapped. All excavations with a potential for entrapment of wildlife will be backfilled or fully covered at the end of the work day. Alternatively, holes or trenches will include one or more escape ramps constructed of earth fill or wooden planks no less than 10 inches wide and reaching to bottom of trench at the close of each working day.

APM BIO-12: Avoidance and minimization of potential impacts on Swainson's hawk. If construction activities are scheduled to occur during the nesting season (February 1 to August 31), a preconstruction survey for nesting Swainson's hawk will be conducted within 0.5 mile of the project area by a qualified biologist. If active nests are found, a qualified biologist will designate an appropriate buffer between construction activities and the nest to avoid disturbance to the nesting. Work within the buffer will not proceed until the nestlings have fledged or the nest becomes inactive.

APM BIO-13: Avoidance and minimization of potential impacts on burrowing owl. Within 30 days of beginning ground-disturbing activities, a preconstruction survey for burrowing owl will be conducted along the agricultural irrigation ditch and any other suitable habitat within 500 feet of the project area by a qualified biologist. If no burrowing owls are detected no further measures are required. If burrowing owls are detected, no construction activities will occur within 250 feet of occupied burrows during the nesting season or within 160 feet of occupied burrows during the non-nesting season. For the purposes of this measure, the nesting season is February 1st to August 31st. Additionally, the burrowing owls will be monitored by a qualified biologist during construction to assess the sensitivity of the burrowing owls to the construction activities. The size of the avoidance buffer may be increased or decreased as determined by the monitoring biologist based on the planned construction activities and the sensitivity of the burrowing owls. If impacts on an active burrow cannot be avoided, passive relocation may be considered. Relocation will be conducted during the nonnesting season and only after a site-specific plan has been developed and implemented in coordination with the CDFW.

APM BIO-14: Avoidance and minimization of potential impacts on nesting birds. If work is scheduled to occur during the avian nesting season (February 1st through August 31st), active work areas will be surveyed by a qualified biologist within 15 days before work begins to determine if any nesting birds are present. Exclusionary buffer zones will be established by a qualified biologist around any active nests within the project area. The size of the buffer zone will be established at the discretion of the biologist based on the following factors: 1) the species' sensitivity to disturbance, 2) the topography surrounding the nest site, and 3) its concealment from project activities. If construction activities are required within an exclusionary buffer zone, the nest will be monitored for disturbance by a qualified biologist until the young have fledged and are independent of the adults. Nest disturbance will be assessed based on behavioral cues such as time off the nest, hesitation approaching the nest, incessant chattering and bill swiping, and other indications. If no nest disturbance is observed, work may continue. If the biologist determines that construction activities are causing nest disturbance, work will not be allowed to continue within the buffer zone until the nest becomes inactive or the young have fledged.

Additional APM cited in this section:

APM AES-2: New source of substantial light or glare avoidance.

Impacts on Biological Resources

Table 5.4-3 includes the significance criteria from Appendix G of the California Environmental Quality Act Guidelines' biological resources section to evaluate the environmental impacts of the proposed project.

Table 5.4-3 Biological Resources Checklist

Would the project:	Potentially Significant Impact	Less Than Significant with Mitigation Incorporation	Less Than Significant Impact	No Impact
a. Have a substantial adverse effect, either directly or through habitat modifications, on any species identified as a candidate, sensitive, or special status species in local or regional plans, policies, or regulations, or by the California Department of Fish and Game or U.S. Fish and Wildlife Service?	☐	☒	☐	☐
b. Have a substantial adverse effect on any riparian habitat or other sensitive natural community identified in local or regional plans, policies, regulations or by the California Department of Fish and Game or U.S. Fish and Wildlife Service?	☐	☐	☐	☒
c. Have a substantial adverse effect on federally protected wetlands as defined by Section 404 of the Clean Water Act (including, but not limited to, marsh, vernal pool, coastal, etc.) through direct removal, filling, hydrological interruption, or other means?	☐	☐	☐	☒
d. Interfere substantially with the movement of any native resident or migratory fish or wildlife species or with established native resident or migratory wildlife corridors, or impede the use of native wildlife nursery sites?	☐	☐	☐	☒
e. Conflict with any local policies or ordinances protecting biological resources, such as a tree preservation policy or ordinance?	☐	☐	☐	☒
f. Conflict with the provisions of an adopted Habitat Conservation Plan, Natural Community Conservation Plan, or other approved local, regional, or state habitat conservation plan?	☐	☐	☐	☒

The applicant is independently required to comply with the federal and state endangered species acts. Specific biological resource mitigation measure requirements in this document may be satisfied through compliance with permit conditions, or other authorizations that may be obtained by the applicant, if these requirements are equally or more effective than the mitigation identified in this document. The applicant shall provide the CPUC with copies of permits or other authorizations, and supporting documentation, to show that compliance with permitting conditions will be equally or more effective as mitigation for impacts to biological resources. The CPUC shall have sole discretion to determine whether compliance with permit conditions will also satisfy the performance standards or requirements identified in mitigation measures in this IS/MND. If the CPUC determines that compliance with permit conditions would also satisfy the mitigation measures in this IS/MND, the applicant shall submit reports to the CPUC documenting compliance, consistent with the reporting requirements of the equivalent mitigation measure or measures.

a. Would the project have a substantial adverse effect, either directly or through habitat modifications, on any species identified as a candidate, sensitive, or special-status species in local or regional plans, policies, or regulations, or by the California Department of Fish and Wildlife or U.S. Fish and Wildlife Service?

LESS THAN SIGNIFICANT WITH MITIGATION

Construction

Special Status Plants

Reconnaissance field surveys were conducted during blooming season and found no special status plant species or potential habitat within the survey area. Database searches of CNDDB and CNPS found 20 special status plant species within the Sanger quadrangle and the eight surrounding quadrangles. Analysis of the known habitat requirements of each plant species found that no special status plant species have a potential to occur in the project area. There is no suitable habitat for the 20 special status species due to the heavy land modification of agriculture in the area and lack of required soil or substrate. Therefore, the project would have no impact on special status plants.

Special Status Wildlife

No special status wildlife species were identified in the area during field surveys. CNDDB, USFWS, and eBird searches found 15 federally or state listed special status species within 10 miles of the project area. In addition, special status wildlife species with no known CNDDB or other documentation of occurrence were considered if required habitat was identified in the project area during applicant or CPUC surveys. During analysis, most species were eliminated from having the potential to occur in the project area based on range or habitat requirements. There is a moderate potential for one special status species—Swainson's hawk *(Buteo swainsoni)*—to occur in the area, and low potential for burrowing owl *(Athene cunicularia)*, loggerhead shrike (*Lanius ludovicanus*), pallid bat (*Antrozous pallidus*), San Joaquin kit fox *(Vulpes macrotis mutica)*, western red bat (*Lasiurus blossevillii*), and white-tailed kite (*Elanus leucurus*).

Birds

The one special status species with moderate potential to occur and three of the species with low potential to occur are migratory birds that may appear on the project site during nesting season. In addition, field surveys found that migratory birds protected by the MBTA and CFGC use the existing substation and its associated utility structures as nesting sites. Impacts on these special status bird species, as well as on nesting birds protected by the MBTA or CFGC, could result from construction activities associated with substation upgrades and expansion, replacement and installation of utility poles, and access road and staging area construction. These activities could result in indirect and direct impacts on special status bird species and nesting birds.

Indirect impacts on special status bird species, including burrowing owl, loggerhead shrike, Swainson's hawk, and white-tailed kite, could result from loss of foraging or nesting habitat. Construction activities across the proposed project may discourage foraging within the immediate vicinity of an active work site; this disruption in foraging is expected to be localized and temporary. A minimal number of lattice structures and vegetation that provide nesting habitat would be removed as part of the proposed project. In addition, the proposed project would include the addition of new substation equipment and a telecommunications tower, which would provide new nesting habitat, and the project site is relatively small; therefore, the loss of habitat would not be significant. These indirect impacts would not be significant.

Construction activities could result in direct mortality or injury of individual special status or nesting bird species resulting from collisions with vehicles and equipment, removal of active nests through tower or vegetation removal. In addition, visual (e.g., night lighting, equipment use) or noise disturbance could result in nest abandonment or nest avoidance. The operation of the current substation creates a low level of noise disturbance (i.e., operational noise levels from existing transformers are a component of ambient noise levels). Ambient noise levels in the project vicinity would increase above baseline conditions on a temporary and intermittent basis during construction. Construction disturbance that results in loss of individual birds, eggs, or nestlings would be a significant impact. Specific construction impacts for each special status bird species are discussed below.

Burrowing Owl

The burrowing owl is designated as a species of special concern by the CDFW and is protected by the MTBA and CFGC. Burrowing owls prefer dry, open habitat with short grass and no trees (Shuford and Gardali 2008). They are frequently associated with burrowing mammals that provide burrows for nesting. Burrowing owls can dig their own burrows; however, they are known to nest in burrows abandoned by mammals or tortoises. Common suitable habitat in agricultural areas includes roadside embankments and levees. Burrowing owls feed on insects, reptiles, birds, and small mammals and are known to hunt both day and night.

Several burrowing owls were recently observed approximately 7 to 8 miles from the proposed project area (Table 5.4-3). No burrowing owls were observed during the field surveys, and no burrowing owl sign (white wash, pellets, feathers, etc.) was seen in the survey area. There is suitable habitat in the survey area in the irrigation ditch, which is 100 feet north of the proposed substation expansion footprint. Numerous ground squirrel burrows were observed in the ditch and one ground squirrel was observed during field surveys; several rodent bait traps were observed along the ditch. The potential for burrowing owl to occur in the project area is low.

Construction activities such as the proposed expansion of the substation would occur within 100 feet of the irrigation ditch. Construction activities could disturb a nesting burrowing owl and result in the loss of eggs or fledglings, interfere with foraging activities, or result in a collision with construction vehicles. This would be a significant impact.

APM BIO-4 would avoid impacts to wildlife and natural habitats, APM BIO-5 would require trash to be disposed of in closed lid containers, APM BIO-10 would limit vehicle speeds, APM BIO-13 would require pre-construction surveys for burrowing owl, and APM BIO-14 would avoid potential impacts on nesting birds. APMs BIO-4, BIO-5, BIO-10, BIO-13, and BIO-14 would reduce impacts, but not to less than significant. APM BIO-4 does not require any specific actions to ensure impact avoidance, APM BIO-5 does not specify that trash containers need to be animal proof, and APM BIO-10 does not provide specific speed limits for project roads. APM BIO-13 proposes buffers for burrowing owl nests that are smaller than CDFW's recommendations and allows the biologist to decrease buffer distances without agency consultation. APM BIO-14 does not describe specific buffer distances for nesting birds and does not outline monitoring and reporting requirements.

In order to reduce the project's impacts on burrowing owls, the applicant would be required to implement Mitigation Measures (MM) BIO-1 through BIO-6. MM BIO-1 would require that all construction personnel participate in an environmental awareness program designed to provide information and training regarding special status species in the area, as well as all mitigation measures and APMs specific to species' impact reduction. MM BIO-2 would require the applicant to perform preconstruction surveys for special status species prior to construction, and MM BIO-3 would require that special status species in the project vicinity are monitored in order to reduce disturbance by project activities. MM BIO-4

supersedes APM BIO-14 by increasing the length of the nesting bird season, adding survey requirements for nesting birds, providing standard buffer distances, and detailing reporting requirements for all nesting birds. MM BIO-5 supersedes APMs BIO-4, BIO-5, and BIO-10 by providing avoidance measures to reduce harassment of wildlife, detailing trash removal efforts to prevent attraction of predators, and providing specific speed limits to reduce potential vehicle strikes of wildlife. MM BIO-6 supersedes APM BIO-13 by providing additional monitoring requirements for burrowing owl nesting season and increasing burrowing owl nest buffer distances. Specifically, MM BIO-6 would require the implementation of an appropriate buffer around any identified occupied burrow, approved by the CPUC, which would be based on the particular owl's tolerance and the disturbance level. Implementation of the appropriate buffer would reduce visual and noise disturbance and thus reduce potential impacts on burrowing owl and nesting birds in general. With the implementation of MM BIO-1, MM BIO-2, MM BIO-3, MM BIO-4, MM BIO-5, and MM BIO-6, the project's impacts on burrowing owl would be less than significant.

MM BIO-1: Biological Resources Worker Environmental Awareness Program. The applicant shall develop a WEAP. Prior to the start of construction, all construction crew members and contractors shall be required to attend the WEAP training presented by a CPUC-approved, qualified biologist. All construction crew members and contractors who attend the training shall sign a form indicating that they attended the training and understood the information. Follow-up training shall be conducted as needed; new workers shall attend WEAP training prior to beginning at the work site. A record of all trained personnel shall be kept on site, and a sticker indicating training completion shall be worn on all worker hard hats.

The WEAP training shall include a review of the special status species and other sensitive resources (e.g., nesting birds) that could exist in the project area, the locations where sensitive biological resources do or may occur, the limits of the work area, applicable laws and regulations, penalties for non-compliance, and APMs and mitigation measures to be implemented for avoidance of these sensitive resources. Additionally, personnel shall be trained for situations where it is necessary to contact a qualified biologist (e.g., should any sensitive biological resources such as an active nest be found during construction). If sensitive resources are found, the qualified biologist shall provide guidelines for the personnel to avoid impacts on them. All WEAP participants shall receive a brochure that outlines all this information including contact information for the appropriate environmental personnel.

MM BIO-2: Pre-activity surveys for sensitive species. A CPUC-approved qualified biologist shall conduct a pre-activity survey for all activities occurring near where sensitive resources may be found within 7 days prior to work commencing. If there is no work in an area for 7 days, it shall be considered a new work area if construction begins again. The biologist shall survey all suitable habitat for sensitive species within 100 feet of the activities (see MM BIO-4, MM BIO-6, or MM BIO-7 for additional nesting bird procedures). If any species listed by the state or federal endangered species acts or protected by other statutes, or their signs, are found, the CPUC and the appropriate wildlife agencies shall be notified within 48 hours to confirm appropriate avoidance measures. If it is determined that construction activity cannot avoid areas where sensitive biological resources are present, the qualified biologist shall coordinate with the CPUC, CDFW, and/or USFWS, as necessary.

If a potential San Joaquin kit fox den is found then a minimum buffer of 50 feet shall be implemented. For a known den, the buffer shall be 100 feet and for a natal den the avoidance buffer shall be determined on a case-by-case basis in coordination with CDFW and USFWS. If dens cannot be avoided by these distances, a CPUC-qualified biologist shall determine occupation following the procedures outlined in USFWS Standardized Recommendations for Protection of the Endangered San Joaquin Kit Fox Prior to and During Ground Disturbance (USFWS 2011) and consult and coordinate with CDFW and USFWS.

MM BIO-3: Biological Monitoring. A CPUC-approved qualified biological monitor shall develop an appropriate schedule of monitoring to ensure that disturbance is minimized to sensitive resources to the greatest extent possible during project activities. The schedule shall ensure that a CPUC-approved qualified biological monitor (1.) visits the project area regularly (at a minimum of every 7 days); (2.) is present to monitor all ground disturbing activities, such as grading and trenching; and (3.) is present to monitor any observed special status species (observed sign or individual) that may be disturbed by project activities. Biological monitors shall be familiar with San Joaquin kit fox and burrowing owl. Avian biologists present during nesting bird season may act as the biological monitor if qualified.

The biological monitor shall be responsible for ensuring that impacts on special status species, their associated habitat, and/or sensitive resources are avoided to the fullest extent possible, and the monitor shall have full authority to halt construction if the monitor observes actual or potential disturbances to sensitive resources. At a minimum of once per 7 days, the monitor shall survey all project components near where construction activities may occur in the next 7 days, as well as the irrigation ditch area. Where appropriate, monitors shall flag the boundaries of areas where activities need to be restricted to protect special status species. If a special status species is present in the project area while construction activities are occurring, the restricted areas shall be monitored to ensure their protection during construction.

MM BIO-4: Mitigation for nesting birds (Supersedes APM BIO-14). The applicant shall implement the measures below in all work areas where any construction-related activities are conducted during the nesting bird season (February 1 to September 15) for all species except Swainson's hawk and white-tailed kite (see MM BIO-7), and burrowing owl (see MM BIO-6).

Nesting Bird Survey Requirements. If work is scheduled to occur during nesting bird season, then the following provisions shall be employed:

- A CPUC-approved qualified avian biologist shall conduct surveys for nesting birds within 7 days prior to the start of any construction-related activities. Areas shall be re-surveyed every 7 days while construction activities are occurring. If there is no work in an area for 7 days, it shall be considered a new work area if construction resumes. In addition, a CPUC-approved qualified monitor shall conduct pre-construction clearance sweeps for nesting birds at all access, staging and, work areas where suitable habitat is present within approximately 24 hours of construction activities each day during the nesting season.
- Surveys shall be conducted with the appropriate buffer, duration, level of effort, and timing based on level of construction disturbance, time of day, and environmental factors. Surveys shall be conducted within a 500 foot buffer of active work areas for raptors and a 250 foot buffer for non-raptors, at a minimum.
- Surveys shall be conducted at a minimum between February 1 and September 15; however, the survey season may need to begin earlier or end later depending on species and weather conditions.
- Survey results shall be provided to the CPUC each week.

Avoid Impacts on Nesting Birds.

- When a nest of any avian or raptor species is located within 500 feet of a construction site, a CPUC-approved qualified avian biologist shall determine whether the nest is active. A nest shall be defined as active once a bird begins nest construction or when a raptor begins "nest decoration." An inactive nest is defined as a nest that has been abandoned by the adult bird or once fledglings are no longer dependent on the nest site or parental care.

- If the nest is active, then the qualified biologist shall implement an exclusionary buffer to prevent construction activities from occurring within a specified distance from the active nest. For active raptor nests located more than 500 feet from the nearest work site, and non-raptor active nests located more than 250 feet from the nearest work site, no additional measures shall be implemented. A minimum standard buffer of 500 feet for an active raptor nest or 250 feet for an active non-raptor nest, as recommended by CDFW (Bahm pers. comm. 2016), shall be implemented when construction activities are occurring. Buffers shall not apply to construction-related traffic using existing roads that are not limited to project-specific use (i.e., county roads, highways, etc.).
- If any active nest of a species listed by the state or federal endangered species acts or fully protected species (other than those specified MM BIO-7) is found, then the minimum standard buffer shall be implemented and the CPUC and the appropriate wildlife agencies shall be notified immediately (within 48 hours).
- As appropriate, nest deterrent strategies may be used to prevent birds from nesting in construction equipment or staged materials. This includes covering equipment with tarps or covering small holes. Bird netting may not be used due to risk of entanglement.
- If construction requires removal of a structure or tree that contains a known or historic nest, then removal of that structure must occur when the nest is determined to be inactive and, if feasible, outside of nesting season.
- PG&E shall adhere to recommendations published by APLIC's Reducing Avian Collisions with Power Lines: The State of the Art in 2012 (APLIC 2012), as feasible.

Monitoring and Reporting. Nest locations and exclusion buffers shall be mapped (using a geographic information system [GIS]) for all identified nests. The information shall be maintained in a database; shall be provided to the CPUC weekly and to USFWS and CDFW monthly; and shall include the following information:

- Date, time, and length of observation period
- Status (active or inactive)
- Species
- Nest location, including nest height
- Behavioral observations
- Site conditions, including construction activities
- Nest exposure
- Estimated date of nest establishment
- Estimated fledge date
- Number of eggs or hatchlings, if observed
- Buffer size implemented

Nests protected by a standard buffer shall be observed by a CPUC-approved qualified avian biologist at a frequency and length of time the avian biologist deems necessary to ensure activities are not causing disturbance to the nest (minimum of once a week during construction) until the biologist has determined that the nest is inactive or until after construction ends in the work area (whichever occurs first). If the biologist observes the birds becoming agitated or the incubating adult leaves the nest as a result of construction activities, he or she shall have the authority to halt work and expand the buffer.

No avian reporting shall be required for construction outside of the nesting season unless species are observed nesting outside of the normal season or special status bird species are observed in the project area.

Buffer Reductions. The specified buffer sizes for nests may be reduced on a case-by-case basis based on compelling biological and ecological reasoning (e.g., the biology of the bird species, concealment of the nest by topography, land use type, vegetation, and the level of project activity), and if a CPUC-approved qualified avian biologist determines that a reduced buffer size would not result in the abandonment of the nest or failure. Buffer reduction requests shall be submitted to the independent avian biologist (a qualified avian biologist approved by the CPUC and who reports directly to the CPUC) to be reviewed and approved. The independent avian biologist shall respond to PG&E's request for a buffer reduction within 48 hours. Buffer reduction requests for special status species (other than those specified in MM BIO-6 and MM BIO-7) shall be submitted to the appropriate wildlife agencies and to the CPUC for approval. The request must include the following:

- Species
- Location
- Pre-existing conditions present on site
- Description of the work to be conducted within the reduced buffer, including equipment type and start date
- Size and expected duration of proposed buffer reduction
- Reason for buffer reduction
- Name and contact information of the CPUC-approved qualified avian biologist who requested the buffer reduction and who shall conduct subsequent monitoring
- Proposed frequency and methods of monitoring necessary for the nest given the type of bird and surrounding conditions as recommended by the CPUC-approved qualified avian biologist

Nests shall be monitored until the avian biologist has determined that the nest is inactive; or construction ends within the standard buffer (whichever occurs first). The biologist shall halt construction and increase the reduced buffer size if it is determined that the nesting bird(s) are agitated or the incubating adult leaves the nest as a result of construction activities.

Nesting in Active Work Areas. Non-special status species found building nests within the standard buffer zone after specific project activities begin and the activities are not expected to increase in duration, intensity, or distance from the nest, shall be assumed tolerant of that specific project activity and such nests shall be protected by the immediate implementation of the maximum buffer practicable (as determined by the CPUC-approved avian biologist). Notification, which includes the same data in the above reduction request, shall then be sent to the CPUC's independent avian biologist within 24 hours and the independent avian biologist shall have the authority to increase the buffer distance. These nests shall be monitored on a schedule determined by the qualified CPUC-approved avian biologist during construction activities until the avian biologist has determined that the nest is inactive; or construction ends within the standard buffer zone (whichever occurs first). If the CPUC-approved avian biologist determines that the nesting bird(s) are not tolerant of project activities, the buffer shall be expanded, and may be expanded beyond the standard buffer distance.

MM BIO-5: Wildlife Protection (Supersedes APM BIO-4, -5, and -10). The applicant shall implement the following measures to ensure protection of all wildlife species.

- Vehicle speed limits on existing unpaved access routes shall not exceed 15 miles per hour and shall not exceed 10 miles per hour on overland access roads. County speed limits shall be followed on existing paved roads. Construction personnel shall avoid collision with wildlife.
- If night work is required, all lighting shall be shielded and point downward and away from any identified sensitive biological resources.
- All trash and debris shall be secured in animal-proof containers before the end of each workday. Containers shall be emptied at least once per week and disposed of at an appropriate off-site location.
- All construction personnel shall not harass any wildlife and shall allow wildlife to leave the work area on their own volition.
- Disturbance limits shall be visibly flagged to ensure construction personnel minimize the construction footprint.

MM BIO-6: Specific Requirements for Burrowing Owl (Supersedes APM BIO-13). A CPUC-approved qualified avian biologist familiar with burrowing owl biology and survey methods shall conduct a pre-construction survey for this species no more than 30 days prior to construction activities during the non-breeding season and no more than 14 days prior to construction during the breeding season (February 1 to August 31 with some variance by geographic location and climatic conditions; CDFW 2012). The biologist shall confirm whether the owls are occupying the site and whether they are actively nesting. If any burrowing owl or sign of an occupied burrow is observed, the CPUC shall be informed as soon as possible (and within 48 hours). Surveys shall include the irrigation ditch and any area with suitable habitat within 656 feet (200 meters) of the project activities. If access to areas with suitable habitat is restricted, the biologist shall visually survey with a spotting scope, binoculars, or other visual techniques.

If an occupied burrow is identified, the CPUC-approved qualified biologist shall immediately implement a minimum 200 meter (656 foot) buffer. Then an appropriate burrow-specific buffer shall be recommended by the CPUC-approved qualified biologist based on the circumstances (e.g., owl tolerance and construction activity level) and as explained by the Staff Report on Burrowing Owl Mitigation (CDFW 2012 or more recent), which shall be approved by the CPUC and then implemented.

In areas where owl presence or owl sign is not found, weekly surveys for burrowing owl and its sign shall be conducted for the remainder of the first breeding season and all following breeding seasons. Survey areas shall include work areas where construction-related activities are occurring, and surveys shall adhere to the following procedures:

- A CPUC-approved qualified avian biologist shall conduct surveys for nesting birds within 7 days prior to the start of any construction-related activities. Areas shall be re-surveyed every 7 days while construction activities are occurring. If there is no work in an area for 7 days, it shall be considered a new work area if construction resumes. In addition, a CPUC-approved qualified monitor shall conduct pre-construction clearance sweeps for nesting birds at all work areas where suitable habitat is present within approximately 24 hours of construction activities each day during the nesting season.
- Surveys shall be conducted with the appropriate duration, level of effort, and timing based on level of construction disturbance, time of day, and environmental factors. Surveys shall be conducted in the irrigation ditch, and any area with suitable habitat within 656 feet (200 meters)

of project activities, at a minimum. If access to areas with suitable habitat is restricted, the biologist shall visually survey with a spotting scope, binoculars, or other visual techniques.

- Surveys shall be conducted at a minimum between February 1 and September 15; however, the survey season may need to begin earlier or end later depending on species and weather conditions.
- Survey results shall be provided to the CPUC each week.

Loggerhead Shrike

The loggerhead shrike is listed as a species of special concern by the CDFW and is protected under the MBTA and CFGC. Loggerhead shrikes are present year-round throughout most of their California range, which includes the Central Valley, where the proposed project would be located. They forage in open grasslands and nest in shrubs and trees. Loggerhead shrikes also depend on thorny bushes or shrubs or barbed wire to impale larger prey, which they then manipulate or store (Shuford and Gardali 2008).

Several observations of loggerhead shrikes are recorded on eBird 5 to 10 miles from the project site (Table 5.4-3). There is a moderate amount of foraging habitat within or adjacent to the project site, but few potential nesting sites. Although no thorny bushes or shrubs were observed during the reconnaissance field surveys, there is barbed wire around the Sanger Substation and a greenhouse area north of the substation that could be utilized by loggerhead shrikes to store and tear apart prey. No evidence of prey storage on the fences was observed during field surveys. The potential for loggerhead shrikes to occur in the project area is low.

Construction activities such as excavation and grading, removal of existing equipment, tree trimming or removal, night lighting for nighttime work, and installation of new substation equipment could result in direct impacts to the breeding and nesting animals. These activities could cause the nesting birds to flush from their nests, potentially resulting in the loss of eggs or fledglings or result in a collision with construction vehicles. These impacts would be significant. The applicant would be required to implement MM BIO-1, which would require all construction personnel participate in an environmental awareness program designed to provide information and training regarding special status species in the area, as well as all mitigation measures and APMs specific to species' impact reduction; MM BIO-2, which would require the applicant to perform preconstruction surveys for special status species prior to construction; MM BIO-3, which would require special status species in the project vicinity to be monitored in order to reduce disturbance by project activities; MM BIO-4, which outlines detailed protocols required for nesting bird surveys and provides specific standard nest buffer distances recommended by CDFW with procedures for buffer reductions; and MM BIO-5, which would reduce harassment and potential vehicle strikes of wildlife. With the implementation of, MM BIO-1, MM BIO-2, MM BIO-3, MM BIO-4, and MM BIO-5, the impacts on loggerhead shrike would be less than significant.

Swainson's Hawk

Swainson's hawk is listed as threatened under CESA and protected under the MBTA and CFGC. The Swainson's hawk breeds in the western United States and Canada during the summer and winters in South America. Most will return to their traditional nest territories in the Central Valley of California by April 1. The majority of their territories in the Central Valley are located in riparian systems with adjacent suitable foraging habitat; there are no riparian systems in the project area. Swainson's hawks typically feed on small mammals and insects, with mammals making up the majority of their diet during breeding season; however, they are opportunistic feeders and will eat bats, snakes, lizards, and birds. They tend to forage in open habitats, including agricultural areas, as most of their foraging habitat has been converted to agricultural use. Vineyards and orchards are typically unsuitable foraging habitat because they provide

few foraging opportunities. Swainson's hawks require scattered tree stands, preferably native trees, or structures near their foraging habitat for nesting (CDFW 2015b).

No Swainson's hawks were observed by biologists during the field surveys. There is a moderate likelihood of occurrence in the proposed project area (Table 5.4-3). The biologists surveyed the proposed project area and all areas accessible by vehicle within a 0.5-mile radius of the project site as recommended by CDFW (CDFW 2000a). Most of the area in a 0.5-mile radius is agriculture and contains very little suitable nesting habitat; nesting habitat is limited to remaining lattice structures, transmission poles, and a small number of trees primarily on the western side of the project area. Four observations have been recorded on eBird over 3 miles from the project site, two of which were in 2015.

Construction activities such as removal of existing towers, excavation and grading, removal of existing equipment, tree trimming or removal, night lighting for nighttime work, and installation of new substation equipment could result in direct impacts to breeding and nesting hawks. These activities could remove nests or cause the nesting birds to flush from their nests, potentially resulting in the loss of eggs or fledglings or result in a collision with construction vehicles. Even though there are no known nests in the 0.5-mile radius, Swainson's hawks have been known to utilize existing raven nests, and ravens were observed in the survey area during field surveys. These impacts on Swainson's hawks would be significant. The applicant would be required to implement MM BIO-1 through MM BIO-5 and MM BIO-7. MM BIO-1 would require all construction personnel to participate in an environmental awareness program designed to provide information and training regarding special status species in the area, as well as all mitigation measures and APMs specific to species' impact reduction; MM BIO-2 would require the applicant to perform preconstruction surveys for special status species prior to construction; MM BIO-3 would require special status species in the project vicinity to be monitored in order to reduce disturbance by project activities; MM BIO-4 outlines detailed protocols required for nesting bird surveys and for reducing impacts on nesting birds; and MM BIO-5 would reduce harassment and potential vehicle strikes of wildlife. The applicant proposed APM BIO-12 to avoid and minimize impacts on Swainson's hawk; however, this measure would not reduce the impacts to less than significant because APM BIO-12 allows a biologist to designate buffers without a minimum buffer distance and does not require protocol level surveys or agency consultation. MM BIO-7 supersedes APM BIO-12 by providing survey method protocols written by CDFW, identifies a minimum buffer, and requires CDFW coordination for a buffer reduction. MM BIO-7 would ensure that CDFW is informed of nest locations, and that CDFW approval would be required for any buffer reductions. With the implementation of MM BIO-1, MM BIO-2, MM BIO-3, MM BIO-4, MM BIO-5, and MM BIO-7, the impacts on Swainson's hawk would be less than significant.

MM BIO-7: Specific Requirements for Special Status Raptors (Except Burrowing Owl) (Supersedes APM BIO-12). A CPUC-approved qualified avian biologist shall conduct pre-construction surveys for Swainson's hawk and white-tailed kite in appropriate habitat within 0.5 miles of project construction activities prior to the start of construction during breeding season (i.e., the "first" breeding season). The avian biologist shall be familiar with the survey methods and biology of these species. Surveys for Swainson's hawk shall follow the protocols outlined in the Recommended Timing and Methodology for Swainson's Hawk Nesting Surveys in California's Central Valley (CDFW 2000a or more recent).

If an active nest (i.e., when nest decoration begins) is identified within 0.5 miles of construction activities, then a CPUC-approved qualified avian biologist shall implement a 0.5 miles buffer around the nest. The CPUC and CDFW shall be informed of the nest as soon as possible (and within 48 hours). Requests to reduce standard buffers must be sent to the CPUC to be reviewed in coordination with CDFW.

If no indication of Swainson's hawk or white-tailed hawk nesting (indications include vocalizations or observations of nesting activities, nests, perched adults, displaying adults, eggs, chicks) is found during protocol-level surveys, weekly surveys for nesting Swainson's hawk and white-tailed kite shall be conducted for the remainder of the breeding season in all work areas where any construction-related activities are occurring, according to the following procedures:

- A CPUC-approved qualified avian biologist shall conduct surveys for nesting birds within 7 days prior to the start of any construction-related activities. Areas shall be re-surveyed every 7 days while construction activities are occurring. If there is no work in an area for 7 days, it shall be considered a new work area if construction resumes. In addition, a CPUC-approved qualified monitor shall conduct pre-construction clearance sweeps for nesting birds at all work areas where suitable habitat is present within approximately 24 hours of construction activities each day during the nesting season.
- Surveys shall be conducted with the appropriate duration, level of effort, and timing based on level of construction disturbance, time of day, and environmental factors. Survey areas shall include work areas and a 500-foot buffer, at a minimum.
- Surveys shall be conducted at a minimum between February 1 and September 15; however, the survey season may need to begin earlier or end later depending on species and weather conditions.
- Survey results shall be provided to the CPUC each week.

During subsequent breeding seasons following the first season, reconnaissance surveys for Swainson's hawk and white-tailed kite shall be performed in appropriate habitat and at the appropriate time within 0.5 miles of project construction activities in order to detect any new nesting activity. If no indication of nesting is found during reconnaissance surveys, weekly surveys for nesting Swainson's hawk and white-tailed kite shall be conducted for the remainder of the breeding season in all work areas where any construction-related activities are occurring (following procedures in the bullet points above).

White-tailed Kite

White-tailed kite is designated as a fully protected species by CDFW and is protected under the MBTA and CFGC. White-tailed kites are found year-round in their habitat range in California, which includes the Central Valley, and are rarely found away from agriculture land. They forage in undisturbed, open grasslands, meadows, and farmlands. White-tailed kites use trees with dense canopies for cover (CDFW 2005).

Several eBird observations have been recorded within 3 to 5 miles of the project area in recent years. Suitable habitat in the proposed project area is present in the form of agriculture land for foraging. However, the project area contains no trees with dense canopies that would be suitable for nesting. During the field reconnaissance surveys, white-tailed kite nests were searched for within a 0.5-mile radius of the project area and no nests were observed. There is a low potential for white-tailed kites to occur in the project area due to lack of nesting habitat.

Construction activities such as excavation and grading, removal of existing equipment, tree trimming or removal, night lighting for nighttime work, and installation of new substation equipment could result in direct impacts to the breeding and nesting birds. These activities could cause nesting birds to flush from their nests, potentially resulting in the loss of eggs or fledglings or result in a collision with a construction vehicle. Impacts on this fully protected species would be significant. The applicant would be required to implement MM BIO-1 through MM BIO-5 and MM BIO-7. MM BIO-1 would require all construction personnel to participate in an environmental awareness program designed to provide information and

training regarding special status species in the area, as well as all mitigation measures and APMs specific to species' impact reduction; MM BIO-2 would require the applicant to perform preconstruction surveys for special status species prior to construction; MM BIO-3 would require that special status species in the project vicinity are monitored in order to reduce disturbance by project activities; MM BIO-4 outlines detailed protocols required for nesting birds surveys and for reducing impacts on nesting birds; MM BIO-5 would reduce harassment and potential vehicle strikes of wildlife; and MM BIO-7 describes required protocols for white-tailed kite in particular.MM BIO-7 would ensure that CDFW is informed of nest locations, and that CDFW approval would be required for any buffer reductions. The implementation of MM BIO-1, MM BIO-2, MM BIO-3, MM BIO-4, MM BIO-5, and MM BIO-7 would reduce the proposed project's impacts on white-tailed kite to less than significant.

Nesting Birds

Nesting birds protected by the MBTA and CFGC may be present in the project area. The MBTA protects all native migratory birds, including active nests and eggs. Birds protected under this act include all native waterfowl, shorebirds, hawks, eagles, owls, doves, and other common birds such as ravens, crows, sparrows, finches, and swallows. The CFGC also protects native migratory birds and provides additional protection for raptors, including common species and their nests. During the reconnaissance field surveys, several nests were observed on structures associated with the existing Sanger Substation. These species, which included house finch (*Carpodacus mexicanus*), mourning dove (*Zenaida macroura*), and western kingbird (*Tyrannus verticalis*), had nests on a lattice structure, a support arm, and a frame structure of the substation, respectively. In addition, a red-tailed hawk (*Buteo jamaicensis*) nest was observed in a lattice tower approximately 600 feet east of the substation. The red-tailed hawk was observed using a nest in the same lattice structure in 2012, 2015, and 2016. The proposed project would remove this lattice structure and replace it with a tubular steel pole, which may not provide the same nesting opportunities. A number of lattice structures would be removed as part of the proposed project; however, other structures would be installed that may provide new nesting opportunities.

Raptors and other birds may nest in trees, in shrubs, on the ground, or on structures in the project area. Birds vary in their tolerance to human presence and activities; however, in general, birds are more likely to abandon a nest early in the nesting cycle while less is invested in the nest. Birds may abandon eggs and fledglings if disturbed by human activities, including the types of construction activities that would be employed by the proposed project. In addition, the removal of vegetation or a tower could impact nesting birds if it contains an active nest. Construction activities that result in the loss of individual birds, fertile eggs or nestlings, that otherwise leads to nest abandonment, or that results in a collision with a construction vehicle, would be a significant impact on nesting birds protected by the MBTA or CFGC.

The applicant would be required to implement MM BIO-1 through BIO-5. MM BIO-1 would require that all construction personnel participate in an Worker Environmental Awareness Program designed to provide information and training regarding special status species in the area and in particular birds protected by the MBTA and CFGC, as well as the project commitments required to reduce impacts. MM BIO-2 would require the applicant to perform pre-construction surveys for sensitive species; MM BIO-3 would require sensitive species to be monitored in order to reduce disturbance by project activities; MM BIO-4 outlines detailed protocols for reducing impacts to nesting birds, including having a qualified avian biologist identify active nests prior to construction and implement buffer size recommended by CDFW, which would reduce visual and noise impacts; and MM BIO-5 would decrease the potential for vehicle strikes and harassment of wildlife. With the implementation of MM BIO-1, MM BIO-2, MM BIO-3, MM BIO-4, and MM BIO-5, impacts on nesting birds would be reduced to less than significant.

Mammals

No special status wildlife species were observed during the field reconnaissance surveys; however, three special status mammal species, pallid bat, San Joaquin kit fox, and western red bat, have a low potential for occurrence on the project site.

Pallid Bat

The pallid bat is listed as a species of special concern by CDFW. It is found throughout California in a variety of habitats including grassland, shrub lands, woodlands, and forests and feed on insects and arachnids (CDFW Undated a). This species is most commonly found in dry, open habitats with rocky outcrops for roosting. Day roosts include caves and crevices, and occasionally hollow trees and buildings. Night roosts can be more open, like buildings and porches (CDFW Undated a).

There are no recorded observations of this species within a 10-mile radius of the project area. The project is within the species habitat range and poor quality roost habitat is available in the form of isolated tree stands and small buildings; therefore, this species has a low potential to occur in the project area. Construction activities would not include removal of trees (other than agricultural trees) or buildings. Noise from the project activities are not expected to significantly increase ambient noise levels near the potential roost sites or foraging areas when foraging is expected to occur. The only construction activities expected at dusk, dawn, or night time, when foraging occurs, are equipment testing and line work, which would only occur during a limited timeframe in Phase 4c of construction and would not significantly interfere with bat foraging, or increase the existing night time background noise levels. Lighting associated with this night time construction could attract insects and, therefore, foraging western red bats. Many bat species are predators that rely on acoustic cues for hunting and could be disturbed by louder environments (Bunkley and Barber 2015). However, any impacts from noise near the lighting associated with any night time construction work would be temporary and intermittent. Construction impacts on pallid bat would be less than significant.

San Joaquin Kit Fox

The San Joaquin kit fox is listed as endangered under the federal ESA and as threatened under the CESA. It is found in open habitats in desert and grassland areas with little human disturbance; however, some agricultural areas may support these foxes. This species inhabits dens in open and level areas that have loose textured soils. It feeds on rodents, insects, reptiles, and some small birds (CDFW 2000b).

The only CNDDB-recorded occurrence within 10 miles of the project area was in 1980, and the location was represented as “Sanger.” The project area is within the species’ range, and suitable foraging habitat may be present. Suitable den habitat is limited to the irrigation ditch and culverts. It is unknown how abundant rodent prey is in the area; a ground squirrel was observed during the CPUC site visit, but several rodent bait stations were observed during site visits along the irrigation ditch. No dens were observed, and feral dogs were seen roaming in the area, which may prey on kit foxes. The potential for occurrence of this species in the project area is low.

Construction activities such as excavating and grading and increased number of vehicles in the area have the potential to directly impact San Joaquin kit foxes. Kit foxes may become entrapped in an open trench or excavation or struck by a vehicle. Although the likelihood of kit foxes to be present on the project site during construction of the proposed project is low, if a kit fox was injured or killed during construction, this impact would be significant. To reduce the level of impact, the applicant would implement the following APMs: APM BIO-9 would reduce the potential for a pet to attack a kit fox, and APM BIO-11 would minimize the potential for a kit fox to become entrapped. Implementation of these APMs would reduce the potential impacts, but not to a less than significant level. Therefore, the applicant would be required to implement MM BIO-1, which would ensure that all construction personnel participate in an

environmental awareness program designed to provide information and training regarding special status species in the area; MM BIO-2, which would require pre-activity surveys; MM BIO-3, which would require that biological monitors would be present year round; and MM BIO-5, which would reduce harassment of wildlife and the potential for vehicle strikes, and would minimize the amount of trash on site, which attracts kit foxes. Implementation of APM BIO-9, APM BIO-11, MM BIO-1, MM BIO-2, MM BIO-3, and MM BIO-5 would reduce impacts on San Joaquin kit fox to less than significant.

Western Red Bat

The western red bat is listed as a species of special concern by CDFW. It is found at low elevations in portions of California, including the Central Valley. The western red bat roosts in forests and woodlands and will feed on a variety of insects in various habitats including grasslands, shrub lands, open woodlands, and croplands (CDFW Undated b). It roosts primarily in edge habitats (CDFW Undated b).

There are no recorded observations of this species within a 10-mile radius of the project area. The project is within the species habitat range and poor quality roost habitat is available in the form of isolated tree stands. Construction activities will not include removal of these trees. Noise from the project activities are not expected to significantly increase ambient levels near the potential roost sites or night time foraging areas. The only construction activities expected at dusk, dawn, or night time, when foraging occurs, are equipment testing and line work, which would only occur during a limited timeframe in Phase 4c of construction and would not significantly interfere with bat foraging, or increase the existing night time background noise levels. Many bat species are predators that rely on acoustic cues for hunting and could be disturbed by louder environments (Bunkley and Barber 2015). Lighting associated with night time construction could attract insects and, consequently, expose foraging western red bats to increased noise that could interfere with their hunting. However, given that any impacts from increased noise levels associated with night time construction work would be temporary and intermittent, there would be no significant impact on bat hunting with the increase in lighting. Construction impacts on western red bat would be less than significant.

Operation and Maintenance

The Sanger Substation would continue to be operated remotely, with routine inspections occurring monthly or as needed under emergency conditions. Power line inspections would not change from those currently conducted on the existing lines. Traffic in the area is not anticipated to increase. The *Pacific Gas & Electric Company San Joaquin Valley Operations and Maintenance Habitat Conservation Plan*, which has been approved by USFWS and CDFW, for routine O&M, including in Fresno County, would cover the proposed project once completed (Jones & Stokes 2006).

Additional permanent substation lighting would be installed. APM AES-2 would require new security lighting to be hooded and designed to avoid lighting offsite locations. With the implementation of APM AES-2, impacts from added lighting on birds and San Joaquin kit fox would be less than significant.

Many bat species are predators that rely on acoustic cues for hunting and could be disturbed by louder environments (Bunkley and Barber 2015). New substation lighting could attract insects and, therefore, foraging pallid bats and western red bats, and thus expose them to noise at the substation that could disrupt their hunting. However, given that there would be no permanent increase in noise levels during substation equipment operation, there would be no impact on bat hunting with the increase in substation lighting.

Direct impacts on birds could result from electrocution by power lines and collision with structures. Lines and structures can be difficult for birds to detect for various reasons such as during night flight or inclement weather conditions.

Electrocution can be caused if conductors and groundwires are placed close enough together that larger birds can touch them simultaneously with their wings or other body parts. Recommendations to avoid electrocution by power lines have been well described by the Avian Power Line Interaction Committee (APLIC 2006), and the applicant has committed to designing structures consistent with these guidelines for the project (PG&E 2015). The current structures identified for removal and replacement were designed and constructed prior to the publication of APLIC recommendations, but are consistent with the current recommendations regarding separation of power lines (PG&E 2015).[1] Thus, the electrocution risk during operations would be similar to the current risk and operational impacts from electrocution would not be significant.

Collisions with structures could have direct impacts on birds. Additional collisions with new structures, including tubular steel poles and the microwave telecommunications tower, would be a significant impact on birds. The implementation of MM BIO-4 would require the applicant to design structures in accordance with the APLIC's guidance for reducing collisions as described in *Reducing Avian Collisions with Power Lines: The State of Art in 2012* (APLIC 2012) as feasible. With the implementation of MM BIO-4, impacts during operations would be less than significant.

b. Would the project have a substantial adverse effect on any riparian habitat or other sensitive natural community identified in local or regional plans, policies, regulations, or by the California Department of Fish and Wildlife or U.S. Fish and Wildlife Service?

NO IMPACT

No riparian habitat or other sensitive natural communities were identified in the survey area. The proposed project area is located entirely within heavily modified agricultural land. Database searches confirm that no USFWS-designated critical habitat, CDFW jurisdictional waters, or special status natural communities occur in the project area; therefore, there would be no impact during construction or operations.

c. Would the project have a substantial adverse effect on federally protected wetlands as defined by Section 404 of the Clean Water Act (including, but not limited to, marsh, vernal pool, coastal, etc.) through direct removal, filling, hydrological interruption, or other means?

NO IMPACT

There are no federally protected wetlands as defined by Section 404 of the CWA within project components. North of the substation expansion footprint there is a manmade irrigation ditch that does not drain into permanent or a traditional navigable water source. The irrigation ditch will not be impacted by the proposed project. There would be no impact to federally protected wetlands as defined by Section 404 of the CWA during construction or operations.

[1] During the CPUC visit to the project area in February 2016, three deceased birds were observed between the perimeter of the existing substation and the road. Cause of death is unknown.

d. Would the project interfere substantially with the movement of any native resident or migratory fish or wildlife species or with established native resident or migratory wildlife corridors, or impede the use of native wildlife nursery sites?

NO IMPACT

There are no known native wildlife nursery sites or migratory routes for any native resident or migratory fish or wildlife species in the project area. The substation expansion would be implemented on highly modified agricultural land with little wildlife habitat. It is unlikely the new structures, including the expanded substation and power lines, would create a new barrier that would inhibit migration during construction or operation. Therefore, there would be no impact.

e. Would the project conflict with any local policies or ordinances protecting biological resources, such as a tree preservation policy or ordinance?

NO IMPACT

Construction and operation of the proposed project would not conflict with local policies or ordinances protecting biological resources, based on a review of the Fresno County General Plan. Policy OS-E9 of the Fresno County General Plan Open Space and Conservation Element would apply to the proposed project. This policy requires that before any discretionary development permit is issued, a biological resources evaluation that considers the potential for significant impacts on any significant natural resources or special status species is completed, and feasible mitigation measures that protect natural resources are identified for the project (Fresno County 2000). The proposed project would not be inconsistent with this policy. The proposed project would not conflict with any additional local policies or ordinances.

f. Would the project conflict with the provisions of an adopted Habitat Conservation Plan, Natural Community Conservation Plan, or other approved local, regional, or state habitat conservation plan?

NO IMPACT

The *Pacific Gas & Electric Company San Joaquin Valley Operations and Maintenance Habitat Conservation Plan*, which has been approved by USFWS for routine operation and maintenance (O&M) in nine counties in the San Joaquin Valley, including Fresno County, would cover routine operation and maintenance activities for the proposed project once construction is completed (Jones & Stokes 2006). The HCP authorizes PG&E's incidental take of 23 wildlife and 42 plant special status species for 33 routine O&M activities. Construction for the proposed project is not a covered activity under the HCP and, thus, PG&E will not rely on the HCP to comply with the federal Endangered Species Act for construction activities. Construction of the proposed project in the same areas as existing infrastructure would not prevent any ongoing implementation of the HCP.

Current O&M activities for the Sanger Substation and existing transmission lines near the Sanger Substation, such as substation inspection, equipment or pole replacement, and fencing repairs, do not necessitate implementation of the Avoidance Minimization Measures from the HCP because the current activities do not result in impacts to natural vegetation and do not result in take of a species covered by the HCP (PG&E 2015). Current operational activities would continue after implementation of the proposed project. Because no HCP Avoidance Minimization Measures are triggered under current operation, none would be expected to be triggered during operation of the expanded substation.

The United States Forest Service Sierra National Forest Land and Resource Management Plan provides forest-wide goals and objectives for managing habitat for state and federally listed threatened and endangered fish, wildlife, and plant species; however, the plan does not provide specific avoidance measures (USFS 1991). The proposed installation of dishes at the Fence Meadow Repeater Station would add an antenna system to an existing tower and utilize existing roads. This work is not expected to impact any habitat or wildlife.

The project would not conflict with the provisions of PG&E's adopted HCP, nor the Sierra National Forest Land and Resource Management Plan, and no other HCPs, Natural Community Conservation Plans, or other conservation plans are known to exist for the proposed project area. Therefore, there would be no impact as a result of conflict with an adopted conservation plan.

5.5 Cultural Resources

This section describes the environmental and regulatory setting and discusses impacts associated with the construction and operation of Sanger Substation Expansion Project (proposed project) proposed by Pacific Gas and Electric (PG&E, or the applicant) with respect to cultural resources. These cultural resources may be described as historic resources, archaeological resources (which may be historic or prehistoric, and are a subset of historical resources), Tribal Cultural Resources (TCR), Native American resources, or paleontological resources, as defined below:

- **Historical Resources:** As defined by the California Environmental Quality Act (CEQA), historical resources are those that are listed on, or determined to be eligible for listing on, the California Register of Historical Resources (CRHR) or a local register, or are otherwise determined to be historical pursuant to CEQA or the CEQA Guidelines (Public Resources Code [PRC] section 21084.1 and California Code of Regulations, title 14, section 15064.5, respectively). A historical resource, for example, may be an object, building, structure, site, area, place, record, or manuscript that is historically significant or significant in terms of California's architectural, engineering, scientific, economic, agricultural, educational, social, political, military, or cultural records. Typically, historical resources are more than 50 years old.
- **Archaeological Resources:** Archaeological resources may be considered historical resources or, if not, they may be determined to be "unique" as defined by CEQA (PRC section 21083.2). Unique archaeological resources are artifacts, objects, or sites that can be demonstrated to: (1) contain information needed to answer important scientific research questions and for which it can be shown that there is a demonstrable public interest in that information; (2) have a special and particular quality such as being the oldest of their type or the best available example of their type; or (3) be directly associated with a scientifically recognized important prehistoric or historic event or person. Non-unique archaeological resources are not typically addressed in environmental impact reports.
- **Native American Resources:** Native American cultural resources may include historical or archaeological resources, rock art, or prominent topographical areas, features, habitats, plants, animals, or minerals that contemporary Native Americans value and consider important for the preservation of Native American traditions.
- **Tribal Cultural Resources:** A TCR is a site, feature, place, cultural landscape, sacred place, or object that is considered of cultural value to a California Native American Tribe and is on either the CRHR or a local historic register; eligible for the CRHR or a local historic register; or is determined by the lead agency, at its discretion and with support of substantial evidence, to be treated as a TCR.
- **Paleontological Resources:** For the purposes of this Initial Study/Mitigated Negative Declaration, paleontological resources refer to fossilized plant and animal remains of prehistoric species. They are valued for the information they yield about the history of the earth and its past ecological settings. Paleontological resources represent a limited, non-renewable, and impact-sensitive scientific and educational resource. Fossil remains such as bones, teeth, shells, and leaves are found in geologic deposits (rock formations). Paleontological resources, in general, include fossils as well as the collecting localities and the geologic formations that contain those fossils.

5.5.1 Environmental Setting

Information presented in this section was compiled from the Cultural Resources Studies for Sanger Substation Expansion Project, Fresno County, California (Morlet et al. 2012). PG&E's Proponent's Environmental Assessment and subsequent submittals for the proposed project (PG&E 2015), and Paleontological Inventory and Evaluation for the Sanger Substation Project, Fresno County, California (Clifford and DeBusk 2015). The California Public Utilities Commission's (CPUC's) qualified consultant reviewed these reports in preparing this analysis.

The tower at the Fence Meadow Repeater Station does not qualify as an historic resource because it was rebuilt within the past two years (USFS 2014). The installation of the two dishes would not result in any ground disturbing activities or have any impact on cultural resources (archaeological and historic), Native American resources, Tribal Cultural Resources, or paleontological resources. Therefore, the antenna system at the Fence Meadow Repeater Station is not discussed further in this section.

Cultural Regional Setting

Prehistory

The prehistory of California's Central Valley spans the entire Holocene and possibly extends to the late Pleistocene times. Fluted Clovis-like projectile points have been found at several inland sites in Tulare Lake and elsewhere in the proposed project vicinity. These signs of early occupation may indicate relatively few small social groupings that utilized simple technology to acquire plants, shellfish, and some larger animals for subsistence. These sites are marked by the absence of ground stone. Very few sites have been identified; this could be due to the small population or to site destruction through erosion and other natural forces.

The prehistory of the San Joaquin Valley is generally divided into three periods. The first period is characterized by big game hunting and is dated from approximately 8,000 years before present (BP) to about 5,000 years BP. The second period is dated from approximately 5,000 BP to anno domini (AD) 1,200 and is characterized by a shift in subsistence strategy from hunting to the collection of plant resources. This shift in economic pursuits is evidenced in typical artifact assemblages from this period, including seed-grinding implements. The third period dates from approximately AD 1,200 to 1,700 and represents habitation of the area by Yokuts.

Ethnography and Ethnohistory

The proposed project area was inhabited by the Wet-chi-Kit Yokuts, an autonomous tribe within the broader Northern Valley Yokuts. Prior to the arrival of Euroamericans in the region, California was inhabited by groups of Native Americans speaking more than 100 different languages and occupying a variety of ecological settings.

History

The Spanish Period in California lasted from circa 1769 to 1821. A Spanish expedition occurred in the proposed project area in 1806. Missions dominated the social, political, and economic lives of both Spanish and Native Americans across much of California during the Spanish Period.

The Mexican Period in California lasted from 1821 to 1848 as an outgrowth of the Mexican Revolution and had political and social effects on the mission system. In 1833, the missions were secularized and their lands divided as ranchos in the form of land grants.

The American Period, which began in 1848 and is ongoing today, started at the end of the Mexican-American War with the signing of the Treaty of Guadalupe Hidalgo. The onset of this period, however, did not initiate a change in the economic condition of most Native American populations. The rancho system also generally remained intact until around 1862 to 1864, when a drought forced many landowners to sell off or subdivide their holdings.

The Gold Rush was the catalyst for major settlement and development of the region. As miners migrated south from the Columbia-Sonora goldfields, many settled on the valley floor. The population increased steadily as the Central Pacific Railroad established lines in the San Joaquin Valley in 1872. The City of Sanger was established in March 1888 following the filing of the town map with the Fresno County Recorder's Office.

Cultural Resources Literature and Records Searches

On March 12, 2012, Southern San Joaquin Valley Information Center (SSJVIC) staff conducted a records search of the proposed project site and 0.5 miles around the site to determine whether prior surveys were conducted in the area and whether there are known cultural resources in the area. The following sources were examined:

- Known and recorded archaeological and historical site records;
- Inventory and excavation reports;
- Historic Property Data File (as of August 15, 2011);
- Properties listed or recommended eligible for the CRHR and National Register of Historic Places;
- California State Historical Landmarks;
- California Historical Resources Information System; and
- California Points of Historical Interest.

Historical information was gathered from the Map Room at California State University, Fresno Henry Madden Library and from the PG&E Records Center in Brisbane, California. Literature from Applied EarthWorks' library was also reviewed.

The records search conducted by the SSJVIC revealed that the proposed project area and area within 0.5 miles has not been previously surveyed and that there are no previously recorded cultural resources within the proposed project area or within 0.5 miles of the proposed project area. A 0.5-mile radius was used for the records search to retrieve information on resources that may be in project work areas as well as to understand the types of resources that may occur in the vicinity of the project area. Additional data sources revealed that a canal, three existing building complexes, and one nonextant[1] historical complex dating to the historic period lie within the vicinity of the proposed project area and are directly adjacent to the proposed areas of direct impact for the substation expansion. The canal is located directly outside of the northern boundary of the access road disturbance area and about 80 feet north of the substation expansion area. The existing building complexes (residences and associated structures and a market), are located on the northeast corner of East Jensen Avenue and South McCall Avenue, the southwest corner of East Jensen Avenue and South McCall Avenue, and the northeast corner of East Jensen Avenue and South Thompson Avenue. The nonextant historical complex (three cottages with detached garages)

[1] In this context, *nonextant* indicates that it is known that the complex existed from historical aerial imagery, but the complex visible in the aerial imagery no longer exists at the site.

overlaps with the western portion of the existing substation parcel, where some work on poles (topping and removal) would be done.

Historical Assessment

An architectural historian conducted archival research to develop a historical context for a control building within the existing Sanger Substation, and the existing Sanger Substation as a whole. The original Sanger Substation was constructed in 1921 and consisted of a tank house, control building, cooling tower, shed, residential cottage, and detached garage. Between 1956 and 1968, components of the original Sanger Substation were replaced with components associated with the existing Sanger Substation, with the exception of the control building (1921 control building). The 1921 control building[2] and the existing Sanger Substation were formally recorded and recommended not eligible for the CRHR because neither meet any of the four criteria defined in section 5024.1 of PRC (Morlet et al. 2012):

- **Sanger Substation:** The Sanger Substation was found not to meet any of the CRHR criteria. Though it is associated with an important electrical system, the Sanger Substation was found not to make a significant contribution to broad patterns of California or local history. The substation also is not associated with important individuals. No evidence was found that the substation demonstrates any new or innovative engineering or technology. There are abundant archival records of the substation, and limited original equipment and infrastructure, meaning that there is no opportunity to obtain additional important information from the substation site.
- **Control Building (individually):** The control building on its own does not meet the criteria for significance related to association with important individuals or important historical events and trends. The control building does not have potential to yield important information given copious documentation of the building and its construction. The building does not have distinctive architecture or artistic value, given that the execution of the Italian Renaissance design is simplistic compared to other buildings in the same style.

Cultural Field Surveys

A reconnaissance level pedestrian survey of proposed disturbance areas was conducted on March 30, April 2, and April 27, 2012, with a supplemental intensive survey occurring on June 28, 2012. No evidence has been found since the surveys in 2012 to indicate that site conditions have changed with regards to presence of archaeological or historic resources. The area surveyed encompassed 142.4 acres, which included the expanded substation site area, the area around the relocated power line alignments and tubular steel poles, existing power lines and pole removal locations, access road locations, and tensioning sites. The existing Sanger Substation site was not surveyed due to extensive ground surface modification. Archaeologists walked the survey area in parallel and meandering transects 10 to 15 meters apart. Where feasible, surveyors examined subsurface exposures for evidence of cultural material constituents.

Some isolated ceramic fragments and glass shards were found in the study area. These items were found near the southwestern corner of the existing Sanger Substation, close to the location of the nonextant historical complex. The items may be a potential surface indicator of the previous structures, due to their proximity to the complex location. However, the items could not be conclusively attributed to the time of the nonextant historical complex and, therefore, were not recorded as historical artifacts (Morlet et al. 2012).

[2] The control building was evaluated for CRHR eligibility as part of the existing Sanger Substation and as a standalone property.

The field survey also confirmed the locations of the historic period structures and canal discussed under the Cultural Resources Literature and Records Searches heading. No project-related activities would impact any of these resources because they are outside of the proposed project area; therefore, they were not formally recorded and are not further discussed in this section.

Buried Site Sensitivity Assessment

Applied Earthworks conducted a buried site sensitivity assessment that considered the potential for the presence of buried cultural deposits by taking into account the proposed project area and the underlying geomorphology and by reviewing available records search data from the SSJVIC. The proposed project area is underlain by soils from the Riverbank Formation, which is Middle Pleistocene in age. Alluvium from the Riverbank Formation is not associated with buried archaeological deposits. The proposed project area is not within the vicinity of any known ethnographic villages and is not located within 500 feet of a perennial freshwater source or any lithic material sources. The potential of encountering buried archaeological deposits within the proposed project area is low (PG&E 2015).

Paleontological Resources Records Search and Survey

Information on paleontological resources was obtained from the University of California Museum of Paleontology during a records search conducted on June 3, 2012. An intensive pedestrian survey was conducted at the proposed Sanger Substation and expansion area and surrounding pole reconfiguration area on March 19, 2015.

The paleontological resources survey indicated that the Riverbank Formation deposits were obscured completely by alluvial soil development and agricultural activity and that average depth of soil development within this region/project vicinity is approximately 5 feet below ground surface. The Riverbank Formation, which underlies the proposed project area, has a high potential for intact paleontological resources 13 to 30 feet below the surface. This is corroborated by the results of a records search conducted for the proposed project, which indicated the presence of three paleontological resources identified outside of the current project area but that were within the Riverbank Formation (Clifford and DeBusk 2015).

Native American Consultation

In November 2011 and September 2015, PG&E contacted the California Native American Heritage Commission (NAHC) to request a search for sacred lands and a list of Native American contacts for the proposed project area. Neither NAHC Sacred Lands File search indicated the presence of known Native American cultural resources in the proposed project area. PG&E sent emails on March 7, 2012, and letters on September 16, 2015, to contacts included on the November 2011 and September 2015 NAHC lists, respectively. These email messages and letters explained the location and provided a brief description of the proposed project, and asked if the Tribe or individual would like to share any information or concerns regarding sacred or other sites of cultural importance in the proposed project area. Additional follow-up calls and email messages were sent to contacts on November 4, 2015.

Table 5.5-1 summarizes the responses PG&E received to its consultation letters. Consultation documentation is provided in Appendix D.

Table 5.5-1 Summary of Native American Consultation

Date of Response	Name	Tribe	Method of Response – Comment
April 12, 2012	Lorrie Planas	Choinumni Tribe	Email – No issues or comments about the proposed project.
March 28, 2012	Bob Pennell	Table Mountain Rancheria	Mail – Declined participation at the time, but expressed the desire to be contacted in the unlikely event that cultural resources are identified.
April 13, 2012	Lalo Franco	Santa Rosa Rancheria Tachi Yokut Tribe	Email – No immediate concerns. Recommended that construction be monitored by an archaeologist and that all parties be made aware of the prescribed actions to be taken in the event of an unanticipated discovery of any cultural resources.
November 4, 2015	Stan Alec	Kings River Choinumni Farm Tribe	Phone – No comments on the proposed project.
November 4, 2015	Jerry Brown	Chowhilla Tribe of Yokuts	Phone – The proposed project is outside of his Tribe's territory.
November 4, 2015	Ron Goode	North Fork Mono Tribe	Phone – No comments on the proposed project.

Tribal Cultural Resources Consultation

Formal consultation under Assembly Bill 52 (AB 52) was not undertaken for the proposed project as no California Native American Tribes requested consultation, as further described in Section 5.5.2, "Regulatory Setting."

5.5.2 Regulatory Setting

Federal

No federal regulations related to cultural or paleontological resources are applicable to the proposed project because no federal lands, monies, or decisions are required for the proposed project.

State

California Register of Historical Resources

The CRHR is an authoritative listing and guide to be used by state and local agencies, private groups, and citizens in identifying the existing historic resources of the state and to indicate which resources deserve to be protected, to the extent prudent and feasible, from substantial adverse change (PRC § 5024.1(a)). The criteria for eligibility for the CRHR are whether the resource:

1. Is associated with events that have made a significant contribution to the broad patterns of California's history and cultural heritage.
2. Is associated with the lives of persons important in our past.
3. Embodies the distinctive characteristics of a type, period, region, or method of construction, or represents the work of an important creative individual, or possesses high artistic values.
4. Has yielded, or may be likely to yield, information important in prehistory or history.

It is possible, however, that resources are still eligible for listing on the CRHR even if they do not retain sufficient integrity to meet listing criteria. The statute deems that certain resources are automatically included in the CRHR, including California properties that were formally determined eligible or are listed in the National Register of Historic Places.

California Environmental Quality Act and Guidelines

Section 21084.1 of the PRC establishes that a substantial adverse effect on an historical resource may have a significant effect on the environment. Under CEQA Guidelines section 15064.5, an historical resource includes: (1) a resource listed in, or determined to be eligible by the State Historical Resources Commission, for listing in the CRHR; (2) a resource included in a local register of historical resources; and (3) any object, building, structure site, area, place, record, or manuscript which a lead agency determines to be historically significant or significant in the architectural, engineering, scientific, economic, agricultural, educational social, political, military, or cultural annals of California by the lead agency, provided the lead agency's determination is supported by substantial evidence in light of the whole record. An archaeological resource may be considered an historical resource. CEQA Guidelines section 15126.4(b) establishes mitigation guidelines for effects on historical resources and historical resources of an archaeological nature.

Archaeological resources may also be historical resources. Under CEQA Guidelines section 15064.5(c), if an archaeological resource does not meet the criteria for a historical resource, then the resource may be treated in accordance with the provisions of PRC section 21083.2 if it is a "unique" archaeological resource. PRC section 21083.2 provides for the protection of "unique archaeological resources" as defined in section 21083.2(g). If it can be demonstrated that a project would cause damage to a unique archaeological resource, the lead agency may require reasonable efforts to preserve in place or avoid the resources. This section also establishes mitigation requirements for the excavation (data recovery) of unique archaeological resources.

If an archaeological resource is neither a unique archaeological nor historical resource, effects of a proposed project on the resource would not be considered a significant effect.

Assembly Bill 52

AB 52 amended CEQA to create a mechanism for formal consultation with California Native American tribes and to add tribal cultural resources (TCRs) as a resource to be considered under CEQA. A tribe must first request to be on the lead agency's list for notification regarding projects proposed in an area within which the tribe is traditionally and culturally affiliated. For tribes that have requested notification, the lead agency must notify the tribes in writing of a proposed project located in the area within which the tribes are traditionally and culturally affiliated. The tribes then can request consultation, at which time the lead agency would commence formal consultation regarding TCRs in the project area, potential impacts to TCRs, and mitigation for those impacts. The CPUC has not received a request for notification from any Native American Tribes with traditional or cultural affiliation to the project area. Thus, CPUC has no obligation to follow the notification or consultation procedures under AB 52. Accordingly, notification or formal consultation were not undertaken for the proposed project.

Additional State Laws Regarding Archaeological and Native American Cultural Resources

California law extends additional protections to Native American cultural resources:

- PRC sections 5097.91 through 5097.991 pertain to the establishment and authorities of the NAHC. These sections also prohibit the acquisition or possession of Native American artifacts or human remains taken from a Native American grave or cairn, except in accordance with an agreement reached with the NAHC, and provide for Native American remains and associated grave artifacts to be repatriated. Subsections 5097.98(b) and (e) require a landowner on whose property Native American human remains are found to limit further development activity in the vicinity until conferring with the most likely descendants (as identified by the NAHC) to consider

treatment options. Because of the importance of human remains to the Native American community, Health and Safety Code sections 7050 through 7054 make the disturbance and removal of human remains felony offenses. Provision is made in PRC section 65092 for the notification of California Native American tribes who are on the contact list maintained by the NAHC about construction projects.

- PRC sections 5097.993 through 5097.994 make it a misdemeanor crime to perform unlawful and malicious excavation, removal, or destruction of Native American archaeological or historical sites on public or private lands.
- Penal Code section 622 establishes as a misdemeanor the willful injury, disfiguration, defacement, or destruction of any object or thing of archaeological or historical interest or value, whether situated on private or public lands.
- PRC section 6254(r) protects Native American graves, cemeteries, and sacred places maintained by the NAHC by protecting records of such resources from public disclosure under the California Public Records Act.

Local

Goal OS-J of the Fresno County General Plan (Fresno County 2000) is "[t]o identify, protect, and enhance Fresno County's important historical, archaeological, paleontological, geological, and cultural sites and their contributing environment."

5.5.3 Environmental Impacts and Assessment

Applicant Proposed Measures

The applicant has incorporated applicant proposed measures (APMs) into the proposed project to specifically minimize or avoid impacts on cultural and paleontological resources. APM CUL-2 was rescinded by PG&E and is therefore not included here. A list of all project APMs is included in Table 4-5.

APM CUL-1: Development and implementation of a worker environmental awareness program. PG&E will design and implement a Worker Education Program that will be provided to all project personnel who may encounter and/or alter historical resources or unique archaeological properties, including construction supervisors and field personnel. No construction worker will be involved in field operations without having participated in the Worker Education Program. The Worker Education Program will include, at a minimum:

- A review of archaeology, history, prehistory and Native American cultures associated with historical resources in the project vicinity;
- A review of applicable local, state, and federal ordinances, laws and regulations pertaining to historic preservation;
- A discussion of procedures to be followed in the event that unanticipated cultural resources are discovered during implementation of the project;
- A discussion of disciplinary and other actions that could be taken against persons violating historic preservation laws and PG&E policies; and
- A statement by the construction company or applicable employer agreeing to abide by the Worker Education Program, PG&E policies, and other applicable laws and regulations.

The Worker Education Program may be conducted in concert with other environmental or safety awareness and education programs for the project, provided that the program elements pertaining to cultural resources are provided by a qualified instructor meeting applicable professional qualifications standards.

APM CUL-3: Unanticipated discovery of potentially significant prehistoric and historic resources. In the unlikely event that previously unidentified cultural resources are uncovered during implementation of the project, all work within 100 feet (30 meters) of the discovery will be halted and redirected to another location. PG&E's cultural resources specialist or his/her designated representative will inspect the discovery and determine whether further investigation is required. If the discovery can be avoided, and no further impacts will occur, the resource will be documented on State of California Department of Parks and Recreation cultural resource records, and no further effort will be required.

APM CUL-4: Unanticipated discovery of human remains management. If human remains are discovered, work in the immediate vicinity will stop immediately and a PG&E Cultural Resources Specialist will be contacted. The location of the discovery will be secured to prevent further impacts and the location will be kept confidential. The Cultural Resources Specialist will evaluate the discovery and will contact the Fresno County Coroner upon verifying that the remains are human. If the coroner determines the remains are Native American, the Native American Heritage Commission will be contacted and the remains will be left in situ and protected until a decision is made on their final disposition.

APM PAL-1: Worker's environmental resources training. All construction crew members must receive a paleontologically focused worker's environmental awareness training module prior to ground disturbance activities for the project. The module will be developed by the lead Paleontologist for the project and can be presented in person, through a safety tailboard, or in some other format, such as a brochure or videotape. The training module will cover the following topics: fossil/paleontological resource identification, discovery guidance, and the contact information of both the paleontological field monitor and the project paleontological resource specialist.

APM PAL-2: Unanticipated discovery plan. In the event that paleontological resources are discovered during construction activities, several procedures must be adhered to. All work must stop within 100 feet of the discovery and the appropriate PG&E Cultural Resources Specialist (CRS) must be contacted at the time of discovery. Avoid any impacts to the site, which includes looting, or any other damage to the resource. Work cannot continue within 100 feet of the resource without approval from the PG&E CRS. The PG&E CRS will coordinate with the lead project Paleontologist in order to protect the resource and evaluate its significance. If the resource is determined significant, the PG&E CRS and Paleontologist will develop a plan to evaluate the resource. The plan may include protection and preservation of the resource, additional documentation, and/or subsurface testing.

APM PAL-3: Paleontological monitoring. A qualified professional paleontologist must prepare a Paleontological Resources Monitoring and Mitigation Plan for the project before the onset of ground disturbance activities for the project. Monitoring will consist of spot-checking all ground disturbance activity in undisturbed soils 10 feet below the surface until such time that a paleontological resource is discovered. Monitoring will not be required for soils at a depth of less than 10 feet. Monitoring can be reduced or discontinued in areas of high sensitivity only if 50% of the ground disturbing work within the Riverbank Formation has been completed and no resources have been identified. Ground disturbing work to be monitored if it occurs 10 feet below the surface includes all excavation and grading for the substation, retention basin, and road, as well as any augering that utilizes an auger greater than 5 feet in diameter. The extent and duration of spot-checking will be determined by the PG&E CRS and the lead paleontologist for the project. If a paleontological resource is identified during ground disturbance activities, monitoring will transition from spot-checking to full-time

monitoring. In the event of a discovery, the monitor can direct the construction crew so that the resource is avoided and can be properly assessed.

Impacts on Cultural Resources

Table 5.5-2 includes the significance criteria from Appendix G of the CEQA Guidelines' cultural resources section to evaluate the environmental impacts of the proposed project.

Table 5.5-2 Cultural Resources Checklist

Would the project:	Potentially Significant Impact	Less Than Significant with Mitigation Incorporation	Less Than Significant Impact	No Impact
a. Cause a substantial adverse change in the significance of a historical resource as defined in §15064.5?	☐	☒	☐	☐
b. Cause a substantial adverse change in the significance of an archaeological resource pursuant to §15064.5?	☐	☒	☐	☐
c. Directly or indirectly destroy a unique paleontological resource or site or unique geologic feature?	☐	☒	☐	☐
d. Disturb any human remains, including those interred outside of formal cemeteries?	☐	☒	☐	☐
e. Cause a substantial adverse change in the significance of a tribal cultural resource as defined in Public Resources Code 20174?	☐	☒	☐	☐

a, b. Would the project cause a substantial adverse change in the significance of a historical resource as defined in §15064.5? Would the project cause a substantial adverse change in the significance of an archaeological resource pursuant to Section 15064.5?

Construction

LESS THAN SIGNIFICANT WITH MITIGATION

The proposed project would result in removal of several components of the existing Sanger Substation, including the 1921 control building. The existing Sanger Substation site and the 1921 control building were both recommended as not eligible for the CRHR. The existing Sanger Substation and 1921 control building do not meet the criteria to be considered a historical resource as defined in California Code of Regulations section 15064.5. The proposed project would not impact the canal or three existing building complexes because they are outside of the project area. No other known historical or unique archaeological resources are located in the project area. The proposed project would have no impact on known historical or unique archaeological resources.

Previously undiscovered historical or unique archaeological resources could be located in the proposed project area and could be significantly impacted during construction of the proposed project if uncovered. For example, there are no surface structures known at the site from the nonextant historical complex ((three cottages with detached garages). However, ground disturbance from the proposed project may uncover subsurface components of the nonextant historical complex given that some isolated ceramic fragments were found during the cultural resources survey in the area. APM CUL-1 would require a worker education and awareness program so that construction workers would be trained on procedures to

follow if a resource is discovered. APM CUL-3 outlines procedures to follow in the event of an unanticipated discovery. APMs CUL-1 and CUL 3 would reduce impacts, but not to less than significant. APM CUL-1 does not require training in types of resources that may be uncovered. APM CUL-3 lacks sufficient detail about the procedure to follow in the event that a resource is discovered. MM CUL-1 supersedes APM CUL-3 by providing further details and outlines procedures that the applicant would follow in the event of an unanticipated discovery. MM CUL-2 supersedes APM CUL-1 by requiring workers be given an overview of the potential types of resources that may be uncovered during construction, including resources associated with the nonextant historical complex. Impacts would be less than significant after implementation of MM CUL-1 and MM CUL-2.

MM CUL-1: Cultural Resources Monitoring and Treatment (supersedes APM CUL-3). A CPUC-approved archaeologist that meets the Secretary of Interior's Professional Qualifications Standards for archaeology shall implement the following procedures if an unanticipated cultural resource is discovered during construction.

Work shall be halted and excluded from within 100 feet of the resource. Protective barriers shall be installed with signage identifying the area as an "environmentally sensitive area." The CPUC shall be notified of the find. Total avoidance of the resource is preferred, and no additional mitigation is necessary if it is avoided. The resource shall be recorded on California Department of Parks and Recreation 523 forms and filed at the South San Joaquin Valley Information Center.

If the resource cannot be avoided, the CPUC-approved archaeologist shall determine in consultation with the CPUC if there is a potential for the resource to be historical (CEQA Guidelines section 15064.5(a)) or a unique archaeological resource (Public Resources Code 21083.2(g)). If the resource is not potentially a historical or unique archaeological resource, work can resume after the CPUC's concurrence. If the resource is potentially a historical or unique archaeological resource, the CPUC-approved archaeologist shall prepare an Evaluation Plan that details the procedures to be used to determine whether the resource is a historical or unique archaeological resource. The Evaluation Plan shall be submitted to the CPUC for review. The CPUC will approve or request changes to the Evaluation Plan within 7 days of submittal by PG&E. Once approved, the Evaluation Plan shall be implemented, and a report shall be prepared that indicates whether the resource is a historical resource or unique archaeological resource. If the discovery is not historical or a unique archaeological resource and the CPUC concurs with that determination, work may proceed in the area of the discovery. If the discovery is historical or a unique archaeological resource, PG&E shall prepare a Data Recovery Plan that would reduce impacts to less than significant.

The Data Recovery Plan shall be prepared in accordance with CEQA Guidelines section 15126.4(b)(3)(C) and PRC section 21083.2 and shall describe methods that will yield relevant information. The Data Recovery Plan shall be submitted to the CPUC for review and approval. The CPUC will approve or request changes to the Data Recovery Plan within 7 days of submittal by PG&E. Once approved, the applicant shall implement the plan. When the field work is completed, a Data Recovery Field Memo shall be prepared that briefly describes the data and materials recovery. The Data Recovery Field Memo shall be submitted to the CPUC for review and approval. The CPUC will approve or request changes to the Data Recovery Field Memo within 7 days of submittal by PG&E. Once the Data Recovery Field Memo has been approved, construction may proceed in the area of the discovery. A more detailed Data Recovery Report shall be prepared within 90 days of the Data Recovery Field Memo. The Data Recovery Report shall present thorough results of the data recovery efforts, conclusions drawn from the work, and where materials will be curated and shall also contain completed California Department of Parks and Recreation 523 forms. The Data Recovery Report shall be submitted to the CPUC for review and approval. Once approved, the Data Recovery Report and 523 forms shall be filed with the South San Joaquin Valley Information Center.

MM CUL-2: Worker Education Program (supersedes APM CUL-1, supplements APM CUL-4). PG&E shall design and implement a Worker Education Program that shall be provided to all project personnel who may encounter and/or alter historical resources or unique archaeological resources, including construction supervisors and field personnel. No construction worker will be involved in field operations without having participated in the Worker Education Program. The Worker Education Program shall include, at a minimum:

- A review of archaeology, history, prehistory and Native American cultures associated with historical resources in the project vicinity;
- A review of the types of resources that could be uncovered in the area, including historical artifacts associated with the nonextant historical complex at the Sanger Substation site;
- A review of applicable local, state, and federal ordinances, laws, and regulations pertaining to historic preservation and Native American resources;
- A discussion of procedures to be followed in the event that unanticipated cultural resources or human remains are discovered during implementation of the project;
- A discussion of disciplinary and other actions that could be taken against persons violating historic preservation laws and PG&E policies; and
- A statement by the construction company or applicable employer agreeing to abide by the Worker Education Program, PG&E policies and procedures, and other applicable laws and regulations.

Operation and Maintenance

NO IMPACT

Operation and maintenance activities would all occur within areas already disturbed during construction of the proposed project. No ground-disturbing activities in previously undisturbed areas would occur during operation and maintenance. There would be no potential for the proposed project to affect historical or archaeological resources during operation and maintenance. As a result, there would be no impact on these resources.

c. Would the project directly or indirectly destroy a unique paleontological resource or site or unique geologic feature?

Construction

LESS THAN SIGNIFICANT WITH MITIGATION

There is a high potential for discovering paleontological resources (buried fossils) within the proposed project area because it is underlain by Riverbank Formation deposits. In the proposed project area, soils within 5 feet of the surface have previously been disturbed. General grading in the substation expansion area would not extend below this depth, meaning there is a much lower potential for discovery of an intact unique paleontological resource in the undisturbed soil, and impacts would be less than significant.

Installation of other components would require excavation or boring deeper than 5 feet into undisturbed soils. Such components include tubular steel pole foundations, the stormwater retention basin, clearance structures, and underground conduit. Removal of lattice steel towers would also require excavation to greater than 5 feet below the ground surface. These activities could unearth a unique paleontological resource, which could be a significant impact. The applicant has included APM PAL-1 as a part of their project, which would require that the worker training include information about the paleontological resources of the area and guidance for resource discovery. APM PAL-2 would require following certain

protocols should paleontological resources be discovered during construction. APM PAL-3 would require monitoring of ground disturbing activities at certain depths and would allow monitoring to end if 50 percent of work has been completed without discovery of a paleontological resource. Impacts would be reduced but would still be significant after implementation of these APMs as the procedures outlined in APM PAL-2 are not specific enough to guide implementation during construction and a resource can be discovered at shallower depths than those outlined in APM PAL-3 or after no resources are discovered after 50 percent of the work is done. MM CUL-3 would supersede APM PAL-2 by providing further details and outlining procedures that the applicant would follow in the event of an unanticipated discovery. MM CUL-4 requires the applicant to prepare and implement a Paleontological Resources Monitoring and Mitigation Plan to further reduce the potential to damage a paleontological resource during construction. Implementation of APM PAL-1, MM CUL-3 and MM CUL-4 would reduce impacts to less than significant.

MM CUL-3 (supersedes APM PAL-2): Unanticipated paleontological resource discovery protocol. If a previously unidentified paleontological resource is discovered during construction, PG&E shall immediately require that work be halted within 100 feet of the resource; measures be put in place to prevent further impacts to the resources, such as protective barriers and/or signs, and/or coverings; that PG&E's CPUC-approved Cultural Resources Specialist (CRS) and paleontological resource specialist be notified; and that the CRS notify the CPUC. PG&E's CPUC-approved paleontological resource specialist shall examine the find and determine whether it is unique under Part V of CEQA Guidelines Appendix G. The CPUC-approved paleontologist may develop significance criteria for the fossils likely to be yielded by the Riverbank Formation, subject to CPUC-approval (such criteria will be documented in the PRMMP discussed in MM CUL-4). In the absence of other agreed-upon criteria, a paleontological resource shall be considered unique if it meets the definition of a significant paleontological resource under the 2010 Society of Vertebrate Paleontology *Standard Procedures for the Assessment of Adverse Impacts to Paleontological Resources* definition:

> Significant paleontological resources are fossils and fossiliferous deposits, here defined as consisting of identifiable vertebrate fossils, large or small, uncommon invertebrate, plant, and trace fossils, and other data that provide taphonomic, taxonomic, phylogenetic, paleoecologic, stratigraphic, and/or biochronologic information. Paleontological resources are considered to be older than recorded human history and/or older than middle Holocene (i.e., older than about 5,000 radiocarbon years).

The results of the evaluation will be submitted to the CPUC, and the CPUC must determine whether or not the resource is unique. If the resource is determined not to be unique, work may commence in the area. If the resource is significant and can be avoided and thus not impacted, PG&E shall document the resource in accordance with professional standards, continue to flag the area for avoidance during construction, and take no further action. Preservation in place, i.e., avoidance, is the preferred method of mitigation for impacts to unique paleontological resources. However, if the resource is unique and cannot feasibly be avoided, PG&E shall consult with the CPUC to determine appropriate mitigation measures.-Mitigation methods may include ensuring that fossils are recovered, prepared, identified, catalogued, and analyzed according to current professional standards under the direction of a qualified paleontologist. Methods of recovery, testing, and evaluation shall adhere to current professional standards for recovery, preparation, identification, analysis, and curation, such as the 2010 Society of Vertebrate Paleontology *Standard Procedures for the Assessment of Adverse Impacts to Paleontological Resources*. Work may commence after data recovery (if undertaken) and upon approval by the CPUC.

MM CUL-4 (supersedes APM PAL-3): Paleontological Resources Monitoring and Mitigation Plan. A qualified professional paleontologist shall prepare a Paleontological Resources Monitoring and Mitigation Plan (PRMMP) for the project before the onset of ground disturbing activities. The

PRMMP shall be submitted to the CPUC for review and approval at least 30 days prior to the start of any excavation to 5 feet below ground surface. PG&E's CPUC-approved paleontological resource specialist shall direct implementation of the PRMMP.

The PRMMP shall include full-time monitoring of excavations extending more than 5 feet deep and auguring/boring extending to more than 5 feet deep and more than 3 feet in diameter, or in lieu of full-time monitoring, the PRMMP shall include the following requirements:

Initial Monitoring:

1. Prior to the start of construction, PG&E's CPUC-approved paleontological resource specialist shall identify a minimum number and array of excavation types (i.e. TSP foundation drilling, grading, retention pond) extending more than 5 feet deep and auguring/boring extending to more than 5 feet deep and more than 3 feet in diameter sufficient to obtain data to determine whether the project area is likely to yield significant paleontological resources. The placement of the locations requiring monitor will be developed by the paleontologist in consultation with PG&E's construction team, and will focus on volume of soil to be disturbed to produce a representative sample. The PRMMP shall identify the methods used (e.g., microscopic examination of matrix samples, visual examination of excavated material) to make the determination.
2. At all sites identified by PG&E's CPUC-approved paleontological resource specialist, a CPUC-approved paleontological field monitor shall monitor the excavation and auguring during the initial stages of construction (i.e., from the beginning of construction until a determination is made after initial monitoring as described in this item) to determine whether the project area is likely to yield significant paleontological resources.

Subsequent Monitoring: The results of initial monitoring shall be described in a memo, to be submitted to CPUC for review and approval. CPUC will review and either request revisions or approve the memo within 2 business days of submittal by PG&E. PG&E shall not reduce or stop monitoring until CPUC approves the memo. Based on the results of initial monitoring, the following measures shall be required and described in the PRMMP:

- If PG&E's CPUC-approved paleontological resource specialist determines that no part of the project area is likely to yield significant paleontological resources, further monitoring shall not be required. PG&E must still make available the paleontological resource specialist and paleontological field monitor (available to go to the work site as needed). Training provided pursuant to APM PAL-1 will enable work crews to identify likely fossils, and inform the appropriate parties if such deposits are identified.
- If PG&E's CPUC-approved paleontological resource specialist discovers significant paleontological resources or determines the project area is likely to yield significant paleontological resources, then continued monitoring shall be required as deemed appropriate by the paleontological resource specialist, in consultation with the CPUC and PG&E's construction team, based on the nature, location, and geologic context of the fossil(s), as well as the potential for further disturbance.

If a paleontological resource is discovered at any time during initial monitoring, continued monitoring, or unmonitored construction, PG&E shall notify the CPUC immediately and the paleontological resource specialist will inspect the matrix for fossils. If a paleontological resource is discovered, MM CUL-3 shall be implemented.

Operation and Maintenance

NO IMPACT

Operation and maintenance activities would all occur within areas already disturbed during construction of the proposed project. No ground-disturbing activities in previously undisturbed areas would occur during operation and maintenance. There would be no potential to affect paleontological resources during operation and maintenance. As a result, there would be no impact on these resources.

d. Would the project disturb any human remains, including those interred outside of formal cemeteries?

Construction

LESS THAN SIGNIFICANT WITH MITIGATION

Research has not uncovered any known Native American or other human remains in the project area. With ground disturbance, there is a possibility that previously unknown human remains may be encountered during construction activities. PG&E would have to adhere to relevant state laws if human remains are found, including CEQA Guidelines section 15064.5(e); PRC sections 5097.94, 5097.98, and 5097.99; and California Health and Safety Code section 7050.5. These laws require actions such as notification of the county coroner as well as Native American consultation for Native American burial sites. Impacts on human remains could still result in a significant impact, however, if workers are not trained in and made aware of these procedures and continue to work in the area. APM CUL-4 requires that work in the area of the discovery will stop immediately; however, APM CUL-4 does not require that workers be trained in the procedures to follow in the case of discovery. A significant impact could therefore still occur. MM CUL-2 supplements APM CUL-4 and requires that SCE train workers on the procedures to follow if human remains are discovered during construction. Impacts would be less than significant with the implementation of APM CUL-4 and MM CUL-2.

Operation and Maintenance

NO IMPACT

Operation and maintenance activities would all occur within areas already disturbed during construction of the proposed project. No ground-disturbing activities in previously undisturbed areas would occur during operation and maintenance. There would be no potential to affect human remains during operation and maintenance. As a result, there would be no impact on these resources.

e. Cause a substantial adverse change in the significance of a tribal cultural resource as defined in Public Resources Code 21074?

Construction

LESS THAN SIGNIFICANT WITH MITIGATION

No TCRs have been identified on the site. There are no known sites, features, places, cultural landscapes, sacred places, or other objects considered of cultural value to a California Native American tribe that is either on the CRHR or local historic register, or eligible for the CRHR or a local historic register. There is a potential for uncovering a previously undiscovered TCR during excavation. Construction activities could cause a substantial adverse change in the significance of a previously undiscovered TCR, which would be a significant impact. MM CUL-5 would be implemented if a potential TCR is encountered during excavation activities, and thus impacts would be less than significant.

MM CUL-5: Undiscovered potential Tribal Cultural Resources. The following procedure shall be employed (after stopping work and following the procedure for determining eligibility in MM CUL-1) if a resource is encountered and determined by the project's qualified archaeologist to be eligible for the CRHR or a local register of historic resources and is associated with a California Native American Tribe(s) with a traditional and cultural affiliation with the geographic area of the proposed project:

- The project's qualified archaeologist shall notify the CPUC for appropriate action. PG&E will assist the CPUC if needed to identify the lead contact person for the California Native American Tribe(s) potentially associated with the cultural resource and with a traditional and cultural affiliation with the geographic area of the proposed project. The CPUC will contact the lead contact person to set up a meeting with PG&E and the CPUC.
- The project's qualified archaeologist shall participate with the CPUC in discussions with the California Native American Tribe(s) whether the resource is a "tribal cultural resource" as defined by PRC section 21084.3(b) and the tribe(s)' preferred method of mitigation, if the resource is determined to be a TCR.
- If no agreement can be reached for mitigation after discussions with the California Native American Tribe(s) or it is determined that the tribe(s)' preferred mitigation is not feasible, PG&E will implement one of the example mitigation measures listed in PRC section 21080.3(b), or other feasible mitigation.

Operation and Maintenance

Operation and maintenance activities would all occur within areas already disturbed during construction of the proposed project. No ground-disturbing activities in previously undisturbed areas would occur during operation and maintenance. There would be no potential to uncover and affect undiscovered TCR during operation and maintenance. As a result, there would be no impact on these resources.

5.6 Geology and Soils

This section describes the environmental and regulatory setting and discusses impacts associated with the construction and operation of the Sanger Substation Expansion Project (proposed project) proposed by Pacific Gas and Electric Company (PG&E, or the applicant) with respect to geology and soils.

No ground disturbing activities would be associated with the installation of two dishes on the existing tower at the Fence Meadow Repeater Station, nor would the additional dishes exacerbate existing conditions related to seismicity. Therefore, the antenna system at the Fence Meadow Repeater Station would not have any impact on geology or soils and is not discussed further in this section.

5.6.1 Environmental Setting

Topography and Geology

The proposed project would be located in the San Joaquin Valley of California, which composes the southern two-thirds of the Central Valley. The San Joaquin Valley is bounded to the east by the Sierra Nevada Mountains and to the west by the Coast Ranges. The valley's northern extent reaches to the Sacramento-San Joaquin River Delta and the City of Stockton. The proposed project would be located near the eastern margin of the San Joaquin Valley, at approximately 345 feet above mean sea level. Site topography is relatively flat with an overall slope of 0 to 1 percent (Kleinfelder 2015).

There are no known, active or potentially active faults in, near, or within 25 miles of the proposed project area. The nearest active faults are the Nuñez fault, approximately 47 miles southwest, and the Pond fault, approximately 65 miles south, near Delano, California. The Nuñez fault has recently shown activity and is associated with the 6.2-magnitude 1983 Coalinga Earthquake and subsequent aftershocks (Stover and Coffman 1993). Figure 5.6-1 presents a regional fault and epicenter map and the approximate location of the proposed project relative to active and potentially active faults, as well as past earthquakes. The Nuñez and Pond faults have been designated as Alquist-Priolo Earthquake faults (Hart 1984; Smith 1983).

While an earthquake's magnitude describes the strength of the forces released at the epicenter, seismic shaking experienced at a specific location depends on many factors, including distance from the epicenter of the earthquake, magnitude of the earthquake, response of the underlying soils, and characteristics of the structures being shaken. Structures located on thick, poorly consolidated materials commonly experience higher levels of shaking and subsequent damage than structures built on more stable and consolidated bedrock. The degree of seismic shaking felt at a specific location on the ground—described as ground acceleration—is measured as a percent of gravitational acceleration (equivalent to g-force [g], 1g = 9.8 meters per second squared). The California Geological Survey (CGS) created the Ground Motion Interpolator in 2008 to provide estimates of peak ground acceleration that may be felt at different locations throughout the state. CGS's Ground Motion Interpolator has estimated that the proposed project site has a 10 percent chance of experiencing peak ground acceleration of 0.161g and a 2 percent chance of experiencing peak ground acceleration of 0.279g over a 50-year period (CGS 2008). The United States Geological Survey considers peak ground acceleration below 0.08g to be weak and above 0.24g to be strong (USGS 2016). Therefore, the project has a 2 percent chance of experiencing strong ground shaking in a 50-year period. Severe ground shaking can cause landslides; can cause fissures and cracks to open in the ground; and can cause loose, saturated material to liquefy.

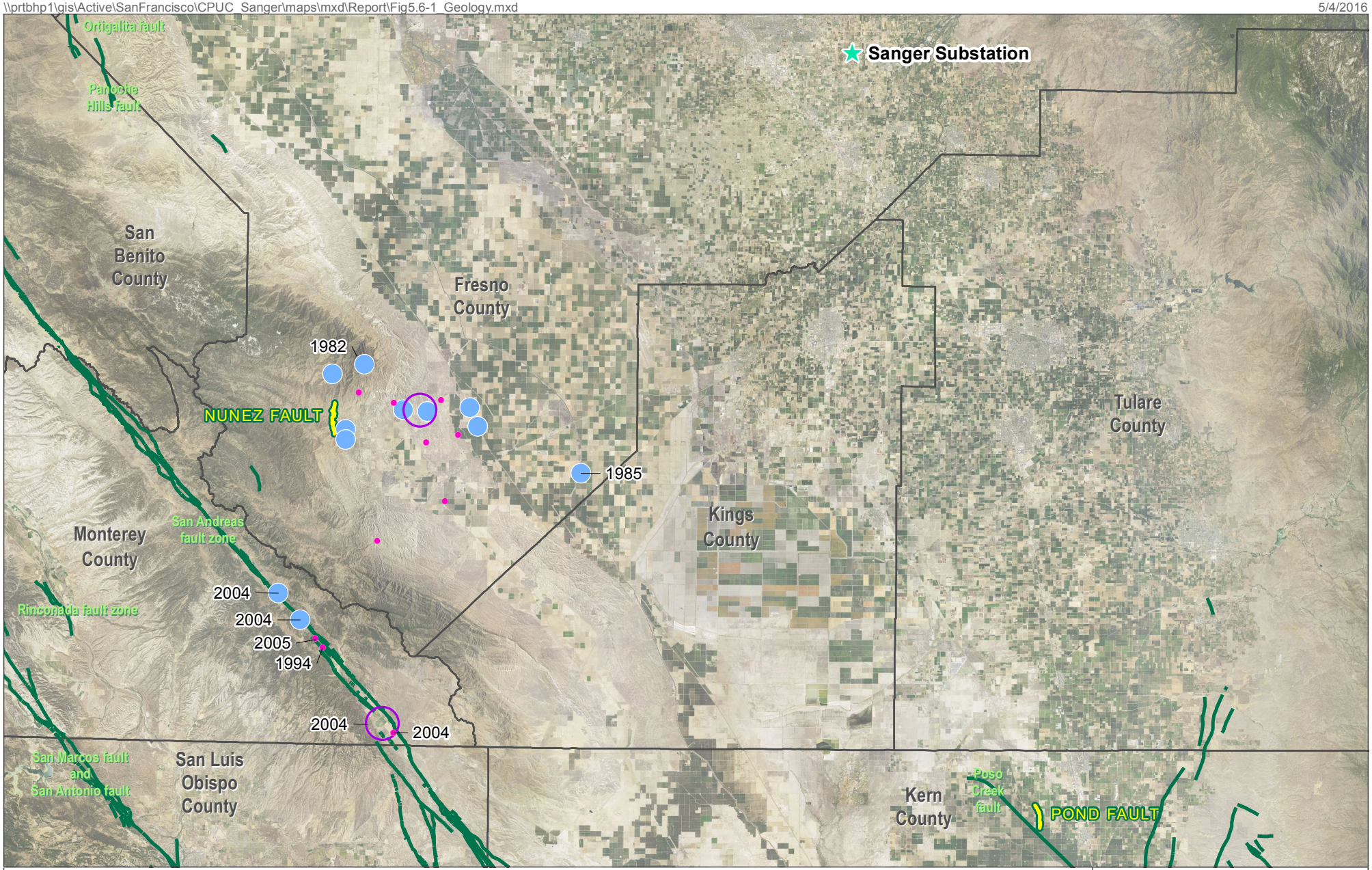

Epicenters of Earthquakes in the last 35 years

Magnitude (in 1983 unless labeled with year)

- 4.5 - 4.9 (Light)
- 5 - 5.9 (Moderate)
- 6 - 6.1 (Strong)

- Project area
- Alquist-Priolo zoned faults
- Other faults

0 2.5 5 10 Miles

Sources: ESRI 2010, PG&E 2015, USGS 2010, 2016
Basemap: NAIP 2014

Figure 5.6-1
Seismic Hazards
Sanger Substation
Fresno County, CA

A landslide is a mass of rock, soil, or debris that has been displaced downslope by sliding, flowing, or falling. While Fresno County has identified areas of landslide hazard, the proposed project area is not within these areas (Fresno County 2000a). Additionally, the relatively flat topography (i.e., 0 to 1 percent grade) of the proposed project site and distance from hills, mountains, or slopes make landslides unlikely.

Liquefaction susceptibility reflects the relative resistance of soils to loss of strength when subjected to ground shaking and occurs primarily in saturated, loose, fine-to-medium-grained soils in areas where the groundwater table is within approximately 50 feet of the ground surface. Shaking causes the soils to lose strength and behave as a liquid. Fresno County has determined that soils in the proposed project area are not susceptible to liquefaction due to either the coarse grain size or the high clay content. (Fresno County 2000b)

Subsidence, the gradual sinking or caving of landmass, affects many areas of California, particularly the San Joaquin Valley. Some portions of the San Joaquin Valley have subsided more than 20 feet. The greatest cause of subsidence is aquifer compaction from sustained ground water overdraft, which lowers ground water levels (Galloway and Riley 1999). While subsidence is evident in portions of western Fresno County, the proposed project area is not within an area where subsidence has occurred (Fresno County 2000a).

Soils

The soils in the project area reflect the rock types present in the hills and mountains east of the San Joaquin Valley, extent of weathering of the rock, degree of slope, and degree of modification by humans. Characteristics and description of the major soil units underlying the Sanger Substation and associated conductor alignment areas are presented in Table 5.6-1.

Table 5.6-1 Soil Types and Characteristics

Soil Series or Association	Description	K Factor	Wind Erodibility Index (tons per acre)	Linear Extensibility (Percent)	Shrink-Swell Class
Sanger Substation Area					
Ramona (Rb)	Ramona sandy loam	.24	86	1.5	Low
GuA	Greenfield sandy loam, moderately deep, 0 to 3 percent slopes	.24	86	1.5	Low
Power Line Reconfiguration Area					
Ramona (Ra)	Sandy Loam, hard substratum	.24	86	1.5	Low
GtA	Greenfield sandy loam, 0 to 3 percent slopes	.24	86	1.5	Low

Source: NRCS 2013
Notes:
Erosion K Factor indicates the susceptibility of a soil to sheet and rill erosion by water.
The Wind Erodibility Index is a numerical value indicating the susceptibility of soil to wind erosion, or the tons per acre per year that can be expected to be lost to wind erosion.
Linear Extensibility refers to the change in length of an unconfined clod as moisture content is decreased from a moist to a dry state and determines shrink-swell class.
Soils with shrink-swell class that are rated moderate to high can damage buildings, roads, and other structures.

Soils in the project area have been mapped as consisting primarily of well-drained, sandy loams of the Ramona and Greenfield series (NRCS 2013). Sandy loams are not expansive (i.e., they have low linear extensibility) and compact well for construction. These soils are slightly corrosive to concrete and moderately corrosive to uncoated steel. They are moderately susceptible to erosion from wind and water.

5.6.2 Regulatory Setting

Federal

Alquist-Priolo Earthquake Fault Zoning Act

The Alquist-Priolo Earthquake Fault Zoning Act was passed in 1972 to mitigate the hazard of surface faulting to structures for human occupancy (Bryant 2009). The law requires establishment of regulatory zones—known as Earthquake Fault Zones—around the surface traces of active faults and issuance of appropriate maps for use in planning and controlling new or renewed construction. While the substation would not be used for human occupancy, the maps help define areas where fault rupture is most likely to occur by grouping faults as active, potentially active, or inactive.

State

Seismic Hazards Mapping Act of 1990

The Seismic Hazards Mapping Act of 1990 directs the CGS to delineate Seismic Hazard Zones and requires site-specific geotechnical investigations prior to permitting most urban development projects within seismic hazard zones. The act addresses the effects of strong ground shaking, liquefaction, landslides, and other ground failure and seismic hazards caused by earthquakes, as well as tsunamis and seiches. City, county, and state agencies are directed to use seismic hazard zone maps developed by CGS in their land use planning and permitting processes.

California Building Standards

The California Building Standards Commission is responsible for coordinating, managing, adopting, and approving building codes in California. The State of California provides minimum standards for building design through the 2010 California Building Standards Code (CBC) per California Code of Regulations, Title 24. Chapter 18 of the CBC regulates the excavation of foundations and retaining walls and specifies when geological reports are required. Appendix J of the 2013 CBC regulates grading activities, including drainage and erosion control and construction on unstable soils, such as expansive soils and areas subject to liquefaction.

Local

The Fresno County General Plan contains several policies related to geological hazards and development. These policies are directed at meeting the county's goal to "[minimize] the loss of life, injury, and property damage due to seismic and geologic hazards" (Fresno County 2000a). These policies are not applicable to the proposed project, given the absence of expansive soils in the project area, slopes greater than 30 degrees, an Alquist-Priolo Fault Zone, and potential landslide hazard.

5.6.3 Environmental Impacts and Assessment

Applicant Proposed Measures

The applicant has incorporated applicant proposed measures (APMs) into the proposed project to specifically minimize or avoid impacts on geology and soils; these are listed below. APM GEO-1 was not applied to reduce significant impacts to geological resources because no impacts were identified that could be minimized through application of APM GEO-1. A list of all APMs is included in Table 4-5.

APM GEO-1: Geotechnical evaluation and soils report. A geotechnical evaluation and soils report has been prepared for PG&E. The report concluded that the substation site is geotechnically suitable for construction of the proposed improvements using conventional grading, shallow and deep foundation systems. A copy of the report will be provided separately to CPUC staff.

APM GEO-2/APM WQ-1: Development and Implementation of Stormwater Pollution Prevention Plan. Because the project involves more than an acre of soil disturbance, a Stormwater Pollution Prevention Plan (SWPPP) will be prepared for the project, as required by the state National Pollutant Discharge Elimination System General Permit for Discharges of Stormwater Associated with Construction Activity. This plan will be prepared in accordance with Water Board guidelines and other applicable erosion and sediment control best management practices (BMPs). Implementation of the plan will help stabilize disturbed areas and will reduce erosion and sedimentation. The SWPPP will designate BMPs that will be followed during and after construction of the project. Examples of erosion-minimizing measures that may be identified in the SWPPP include the following:

- Using drainage control structures (e.g., straw wattles or silt fencing) to direct surface runoff away from disturbed areas;
- Strictly controlling vehicular traffic;
- Implementing a dust-control program during construction;
- Restricting access to sensitive areas;
- Using vehicle mats in wet areas; and
- Revegetating disturbed areas, where applicable, following construction.

In areas where soils are to be temporarily stockpiled, soils will be placed in a controlled area and managed with similar erosion control techniques. Where construction activities occur near a surface waterbody or drainage channel and drainage from these areas flows towards a waterbody or wetland, stockpiles will be placed at least 100 feet from the waterbody or will be properly contained by, for example, berming or covering to minimize risk of sediment transport to the drainage. Mulching or other suitable stabilization measures will be used to protect exposed areas during and after construction activities. Erosion-control measures will be installed, as necessary, before any clearing during the wet season and before the onset of winter rains. Temporary measures, such as silt fences or wattles intended to minimize erosion from temporarily disturbed areas, will remain in place until disturbed areas have stabilized.

The SWPPP will be designed specifically for the hydrologic setting of the project.

Impacts on Geology and Soils

Table 5.6-2 includes the significance criteria from Appendix G of the California Environmental Quality Act Guidelines' geology and soils section to evaluate the environmental impacts of the proposed project. A detailed analysis for significance criteria item (e) is not provided below as the proposed project would

not involve the construction of septic tanks or the use of existing septic tanks during construction or operation and, therefore, would have no impact.

Table 5.6-2 Geology and Soils Checklist

Would the project:	Potentially Significant Impact	Less Than Significant with Mitigation Incorporation	Less Than Significant Impact	No Impact
a. Expose people or structures to potential substantial adverse effects, including the risk of loss, injury, or death involving: i) Rupture of a known earthquake fault, as delineated on the most recent Alquist-Priolo Earthquake Fault Zoning Map issued by the State Geologist for the area or based on other substantial evidence of a known fault? Refer to Division of Mines and Geology Special Publication 42.	☐	☐	☐	☒
ii) Strong seismic ground shaking?	☐	☐	☒	☐
iii) Seismic-related ground failure, including liquefaction?	☐	☐	☒	☐
iv) Landslides?	☐	☐	☐	☒
b. Result in substantial soil erosion or the loss of topsoil?	☐	☐	☒	☐
c. Be located on a geologic unit or soil that is unstable, or that would become unstable as a result of the project, and potentially result in on- or off-site landslide, lateral spreading, subsidence, liquefaction or collapse?	☐	☐	☒	☐
d. Be located on expansive soil, as defined in Table 18-1-B of the Uniform Building Code (1994), creating substantial risks to life or property?	☐	☐	☐	☒
e. Have soils incapable of adequately supporting the use of septic tanks or alternative waste water disposal systems where sewers are not available for the disposal of waste water?	☐	☐	☐	☒

a. Would the project expose people or structures to potential substantial adverse effects, including the risk of loss, injury, or death involving:

i) Rupture of a known earthquake fault, as delineated on the most recent Alquist-Priolo Earthquake Fault Zoning Map issued by the State Geologist for the area or based on other substantial evidence of a known fault? Refer to Division of Mines and Geology Special Publication 42.

NO IMPACT

The proposed project would not lie within an Alquist-Priolo Earthquake Fault Zone. The closest mapped Alquist-Priolo fault, the Nuñez fault, is approximately 47 miles away (CGS 2015; Figure 5.6-1). Furthermore, the project would not exacerbate fault rupture conditions. There would be no impact under this criterion.

ii) Strong seismic ground shaking?

LESS THAN SIGNIFICANT IMPACT

The proposed project would not be located near known active faults; however, Fresno County has determined that a strong earthquake on a regional fault could result in moderate ground shaking in valley portions of the county where expansive soils tend to experience greater ground shaking intensities than areas underlain directly by hard rock (Fresno County 2000b). CGS's Ground Motion Interpolator suggests that the probability for strong seismic shaking in the proposed project area is low (CGS 2008). The proposed project area is only susceptible to moderate or lesser ground shaking as a result of a strong earthquake on one of the nearest active faults. Furthermore, the proposed project would not exacerbate conditions related to strong seismic ground shaking. The proposed project involves the expansion of an existing substation that would be unmanned during operation. The project is located in a rural agricultural area with a sparse population. Therefore, in the event that strong seismic shaking were to occur, the potential to expose the public to injury or death would be similar to existing conditions. Impacts under this criterion are less than significant.

iii) Seismic-related ground failure, including liquefaction?

LESS THAN SIGNIFICANT IMPACT

The proposed project area is not underlain by expansive or liquefiable soils (Fresno County 2000a; Kleinfelder 2015). The applicant completed a geotechnical evaluation to identify site-specific geologic conditions and some potential geologic hazards; groundwater was not detected during test boring (Kleinfelder 2015). Due to the absence of shallow groundwater, the lack of expansive soils, and the proposed project's location 47 miles or more from known active faults, the proposed project is not considered susceptible to liquefaction or other seismically induced ground failures. The proposed project would not exacerbate existing conditions related to seismic-related ground failure. Risk of loss, injury, or death from seismic-related ground failure, including liquefaction, would be less than significant.

iv) Landslides?

NO IMPACT

According to the Fresno County General Plan, the valley portion of the county is not at risk of large seismically induced landslides or rock falls due to its flat topography (Fresno County 2000b). Construction of the proposed project would not produce slopes susceptible to landslides. The minimal slope of the proposed site (0 to 1 percent) and lack of nearby hill slopes indicates that the risk of landslides is improbable. Furthermore, the proposed project would not result in creation of slopes that may create landslides. There would be no impact to the risk of loss, injury, or death from landslides.

b. Would the project result in substantial soil erosion or the loss of topsoil?

LESS THAN SIGNIFICANT IMPACT

As indicated in Table 5.6-1, soil on the proposed project site is moderately susceptible to erosion by wind and water. Earth-moving activities, including trenching, excavating, stockpiling, and grading would occur during construction. Additionally, soil would be stockpiled within the expanded substation. Each earth-moving and ground-disturbing activity mobilizes the soil and increases the chance of erosion, which would be a significant impact given the size and continuity of the substation area and the mobility of the agricultural soils. As detailed in APM GEO-2/WQ-1, the applicant would prepare and implement a

SWPPP in accordance with National Pollutant Discharge Elimination System to minimize the potential for soil erosion. Additionally, as detailed in APM AIR-1, the applicant would develop a Dust Control Plan per San Joaquin Valley Air Pollution Control Board Regulation VIII. The Dust Control Plan would include BMPs for limiting track-out onto roadways and reducing erosion due to wind (see Table 4-5). While the soils on the proposed site are susceptible to erosion, implementation of recommendations contained in the SWPPP and Dust Control Plan, prepared under APM AIR-1 and APM GEO-2/WQ-1, would minimize erosion. The proposed project would, therefore, result in less than significant impacts from soil erosion or loss of topsoil.

c. Would the project be located on a geologic unit or soil that is unstable, or that would become unstable as a result of the project, and potentially result in on- or off-site landslide, lateral spreading, subsidence, liquefaction or collapse?

LESS THAN SIGNIFICANT IMPACT

The substation site and power line routes would be located on land with low topographic relief. The applicant completed a geotechnical evaluation to identify site-specific geologic conditions and some potential geologic hazards at the project site. The geotechnical evaluation provided design and construction recommendations to reduce potential impacts from geologic hazards or soil conditions. Soils on the proposed site are described as silty sand with adequate drainage (Kleinfelder 2015). Soils in the proposed project area compact well for construction and are not significantly susceptible to on- or off-site landslides or lateral spreading due to the low topographic relief of the existing site and the proposed substation (USGS 2012). Project site soils are not susceptible to liquefaction due to the relatively deep water table. The proposed project area is not located in an area that has experienced subsidence or collapse (Fresno County 2000a). Furthermore, the proposed project would not exacerbate unstable soil conditions. Impacts under this criterion would be less than significant.

d. Would the project be located on expansive soil, as defined in Table 18-1-B of the Uniform Building Code (1994), creating substantial risks to life or property?

NO IMPACT

All project site soils are sandy loams, which are characterized as having a low shrink-swell class and low linear extensibility of 1.5 percent. Both available measures of soil expansiveness indicate that site soils are not considered expansive. The proposed project would not exacerbate or cause expansive soil conditions. There would be no impact under this criterion.

5.7 Greenhouse Gases

This section describes the environmental and regulatory setting and discusses impacts associated with the construction and operation of the Sanger Substation Expansion Project (proposed project) proposed by Pacific Gas and Electric Company (PG&E, or the applicant) with respect to greenhouse gases (GHGs).

5.7.1 Environmental Setting

GHGs are atmospheric gases that prevent part of the infrared radiation emitted by the Earth from escaping into space, trapping it inside the Earth's atmosphere. Scientific research has established a link between the amount of GHGs in the atmosphere and observed changes of the Earth's climate; GHGs have direct and indirect effects on mean temperature, precipitation, sea levels, ocean currents, wind patterns, and storm activity. Regulatory efforts to manage the anthropogenic drivers of global climate change focus on six primary GHGs: carbon dioxide (CO_2), methane (CH_4), nitrous oxide (N_2O), hydrofluorocarbons (HFCs), perfluorocarbons (PFCs), and sulfur hexafluoride (SF_6). The anthropogenic GHGs that are emitted in the greatest quantities are CO_2 and CH_4. Emissions of CO_2 are largely by-products of fossil fuel combustion, whereas CH_4 results mostly from off-gassing associated with agricultural practices and landfills. In 2012, the United States was the second largest contributor to GHG emissions in the world (WRI 2015), and California was the second largest contributor to GHG emissions in the United States (EPA 2015). The largest source of GHG emissions in California is transportation, followed by industrial activities, with electricity generation in state and out of state ranking third and fourth, respectively (CARB 2015). Future climate change impacts in California could include changes in weather patterns, average sea level, ocean acidity, rates of chemical reactions, and precipitation rates.

The potential of a GHG to trap heat in the atmosphere is known as global warming potential (GWP). The GWP is defined as the amount of heat trapped by a given mass of gas over a given time period compared to the heat trapped by the same mass of CO_2. Table 5.7-1 shows the GWP for the six GHGs previously mentioned.

Table 5.7-1 Greenhouse Gases Global Warming Potentials

Greenhouse Gas	Global Warming Potential[1], 100 years (relative to CO_2)
Carbon Dioxide (CO_2)	1
Methane (CH_4)	25
Nitrous Oxide (N_2O)	298
Perfluorocarbons (PFCs)	7,390–12,200
Hydrofluorocarbons (HFCs)	92–14,800
Sulfur Hexafluoride (SF_6)	22,800

Source: IPCC 2012

The California Air Resources Board (CARB) reported that in 2013 CO_2 represented 84 percent of the GHG emissions produced in California (CARB 2015a). Because CO_2 is such a prevalent GHG, and the GWP for other GHGs is relative to CO_2, GHGs in the atmosphere are reported in terms of CO_2 equivalency (CO_2e). GHG emissions as CO_2e are calculated by multiplying the mass of each GHG emitted by its GWP to determine the equivalent amount of CO_2. For example, one pound of CH_4 is equivalent to 25 pounds of CO_2e.

5.7.2 Regulatory Setting

Federal

Endangerment Finding and Cause or Contribute Finding for Greenhouse Gases

In December 2009, the U.S. Environmental Protection Agency (EPA) issued two separate findings regarding GHGs under Section 202(a) of the Clean Air Act. The Endangerment Finding states that the current and projected concentrations of the six key GHGs (CO_2, CH_4, N_2O, HFCs, PFCs, and SF_6) in the atmosphere threaten public health and welfare. The Cause or Contribute Finding states that the combined emissions of GHGs from new motor vehicles and new motor vehicle engines contribute to GHG pollution.

Mandatory Reporting of Greenhouse Gases Rule

In 2009, the EPA issued the Final Mandatory Reporting of Greenhouse Gases Rule, which requires reporting of GHG emissions from large sources and suppliers in the United States. This rule requires suppliers of fossil fuels and industrial GHGs, manufacturers of vehicles and engines outside of the light-duty sector, and facilities that emit more than 25,000 metric tons of CO_2e ($MTCO_2e$) per year to submit annual reports to the EPA. The rule is intended to collect accurate and timely emissions data to guide future policy decisions on climate change. The proposed project is not anticipated to emit 25,000 MTCO2e per year or more; therefore, an annual report to the EPA would not be required.

State

Assembly Bill 32 and Executive Order S-3-05

Executive Order S-3-05, issued in 2005, established statewide GHG emission reduction targets of 2000 levels by 2010, 1990 levels by 2020, and 80 percent below 1990 levels by 2050. The Global Warming Solutions Act, Assembly Bill (AB) 32, enacted in 2006, required a reduction in the state's GHG emissions to 1990 levels by 2020 and required that CARB prepare and approve a scoping plan for achieving the maximum technologically feasible and cost-effective reductions in GHG emissions from sources or categories of sources of GHGs by 2020.

Based on 1990 to 2004 inventories of GHG emissions in California, CARB designated a total of 427 million $MTCO_2e$ as the statewide GHG 1990 emissions level and 2020 emissions limit. The 2020 estimates of California's GHG emissions were recently updated to account for future fuel and energy demand, as well as other factors, such as the recent economic recession and anticipated reductions from implemented regulations and the Renewable Portfolio Standard. This update provided a baseline for the proposed Cap-and-Trade regulation, and 2020 emissions are currently forecast at 509 million $MTCO_2e$ (CARB 2015b).

The Climate Change Scoping Plan, approved by CARB in 2008 and updated in 2014 to fulfill AB 32, is California's roadmap for reaching its GHG reduction goals (CARB 2014). The plan outlines a number of key strategies to reduce GHG emissions.

Climate Change Scoping Plan GHG reduction measures that are applicable to the proposed project include the Low Carbon Fuel Standard, regional transportation-related GHG targets, light-duty vehicle GHG standards, medium/heavy-duty vehicle GHG standards, vehicle efficiency measures, goods movement, energy efficiency, high GWP gases, and recycling and waste. The California legislature has also passed legislation implementing most of the Climate Change Scoping Plan measures. Legislation applicable to the proposed project is described below.

Assembly Bill 1493 – Pavley

In 2002, the California legislature adopted regulations to reduce GHG emissions in the transportation sector, the state's largest source of GHG emissions. In September 2004, pursuant to AB 1493, CARB approved regulations to reduce GHG emissions from new motor vehicles beginning with the 2009 model year. In September 2009, CARB adopted amendments to the Pavley regulations to reduce GHG from 2009 to 2016. CARB, EPA, and the National Highway Traffic and Safety Administration have coordinated efforts to develop fuel economy and GHG standards for model years 2017 to 2025 vehicles. The GHG standards are incorporated into the "Low Emission Vehicle" Regulations.

Executive Order S-01-07 – Low Carbon Fuel Standard

In January 2007, the governor set a new standard for transportation fuels sold in California, which sets a reduction of 2.5 percent in the carbon intensity of transportation fuels by 2015 and a reduction of at least 10 percent by 2020.

California Renewable Energy Programs

In 2002, California initially established its Renewables Portfolio Standard, with the goal of increasing the percentage of renewable energy in the State's electricity mix to 20 percent by 2017. State energy agencies recommended accelerating that goal, and California Executive Order S-14-08 (November 2008) required California utilities to reach the 33 percent renewable electricity goal by 2020, consistent with the AB 32 Scoping Plan. In April 2011, Senate Bill 2 of the First Extraordinary Session (SB X1-2) was signed into law. SB X1-2 expressly applies the new 33 percent Renewables Portfolio Standard by December 31, 2020, to all retail sellers of electricity and establishes renewable energy standards for interim years prior to 2020.

Executive Order B-30-15

Executive Order B-30-15 was signed in April 2015, establishing a new interim statewide GHG emission reduction target of 40 percent below 1990 levels by 2030. The interim reduction target was established to ensure that California meets its goal of reducing GHG emissions to 80 percent below 1990 levels by 2050. Executive Order B-30-15 requires state agencies to consider climate change in their planning and investment decisions, giving priority to actions that reduce GHG emissions.

Other Mobile Source Reduction Requirements

Several other state provisions address the GHG emissions reduction targets set by CARB for mobile sources. Measures applicable to the proposed project include the following:

- **Advanced Clean Cars Program:** A set of regulations that would apply to new vehicles with model years between 2017 and 2025, with a goal of GHG emission reduction of 34 percent in 2025.
- **Heavy-Duty Truck GHG Regulations:** Regulations that apply to new heavy-duty tractors and trailers to reduce GHG emissions.
- **On-Road Heavy Duty Diesel Vehicle Regulations:** Requires diesel trucks and buses to be upgraded to reduce GHG emissions under a phased implementation that would have almost all buses and trucks updated with 2010 engines by January 1, 2023.

California Code of Regulations Title 17, Sections 95350 to 95359

California Code of Regulations Title 17, Sections 95350 to 95359, establish requirements for reducing SF_6 emissions from gas-insulated equipment. The provisions of this regulation apply to owners of active

switchgear equipment. It specifies maximum allowable annual SF_6 emission rates, SF_6 inventory measurement procedures, recordkeeping requirements, and annual SF_6 reporting requirements. Because SF_6 is the most potent GHG (about 24,000 times the GWP of CO_2), even small gas-insulated devices could be responsible for significant GHG emissions. The maximum allowable annual SF_6 emission rate specified is 1.0 percent of the total gas contained in gas-insulated equipment. This rate must be achieved by 2020 and each calendar year thereafter.

California Green Building Standards

California Code of Regulations Title 24, Part 11 establishes the requirements to improve health, safety, and general welfare by enhancing the planning, design, operation, construction, use, and occupancy of every newly constructed building or structure throughout the state of California. Section 5.408 of this code establishes mandatory requirements for construction waste reduction, disposal, and recycling for nonresidential building structures. In particular, Section 5.408.1 requires recycling and/or salvaging for reuse of a minimum of 50 percent of the nonhazardous construction and demolition waste. In addition, Section 5.408 requires preparation of a construction waste management plan, selection of a waste management company that can provide verifiable documentation, alternatives for waste stream reduction, and requirements for managing excavated soils and land clearing debris.

Assembly Bill 1826

AB 1826 (Chapter 727, Statutes of 2014) was enacted in October 2014. AB 1826 requires businesses to recycle their organic waste on and after April 1, 2016, depending on the amount of waste they generate per week. The law also requires local jurisdictions across California to implement organic waste recycling programs to divert organic waste generated by businesses, including multi-family residential buildings that consist of five or more units. AB 1826 was enacted to reduce the disposal of organic waste in landfills in an effort to reduce GHG emissions from landfills, which is a part of the CARB Climate Change Scoping Plan.

Local

San Joaquin Valley Air Pollution Control District Climate Change Action Plan

In August 2008, the San Joaquin Valley Air Pollution Control District (SJVAPCD) adopted its Climate Change Action Plan (CCAP). The CCAP directed the SJVAPCD to develop guidance to assist California Environmental Quality Act (CEQA) lead agencies, project proponents, permit applicants, and interested parties in assessing and reducing the impacts of project GHG emissions on global climate change (SJVAPCD 2008).

In December 2009, the SJVAPCD Board approved two guidance documents: Guidance for Valley Land-use Agencies in Addressing GHG Emission Impacts for New Projects under CEQA (SJVAPCD 2009a); and SJVAPCD Policy: Addressing GHG Emission Impacts for Stationary Source Projects Under CEQA When Serving as the Lead Agency (SJVAPCD 2009b). These policies provide that "Projects complying with an approved GHG emission reduction plan or GHG mitigation program which avoids or substantially reduces GHG emissions within the geographic area in which the Project is located would be determined to have a less than significant individual and cumulative impact for GHG emissions" (SJVAPCD 2009a). These policies are cited in the most recent Guidance for Assessing and Mitigating Air Quality Impacts (GAMAQI) published by the SJVAPCD (2015).

Where an approved GHG emission reduction program is not in place, or the Project will not comply with it, the guidance documents rely on the use of Best Performance Standards (BPS) as a basis for assessing the significance of project GHG emissions on global climate change under CEQA. BPS consist of established specifications or project design elements that are used as a method of determining significance

of project-specific GHG emission impacts. BPS are defined as the most effective achieved-in-practice means of reducing or limiting GHG emissions from a GHG emissions source. Projects implementing BPS would have less than significant impacts for GHG emissions. Projects that do not comply with an approved GHG emission reduction plan or use BPS must demonstrate a 29 percent reduction in GHG emissions from business-as-usual in order to be determined to have a less than cumulatively significant impact on global climate change. Business-as-usual is determined by multiplying 2002–2004 emission factors by the activity expected to occur in 2020. The guidance does not limit a lead agency's authority to establish its own process and guidance for determining significance of project-related impacts on global climate change (SJVAPCD 2009a).

5.7.3 Environmental Impacts and Assessment

Applicant Proposed Measures

The applicant has incorporated applicant proposed measures (APMs) into the proposed project to specifically minimize or avoid impacts on GHGs. A list of all project APMs is included in Table 4-5.

APM GHG-1: Minimize GHG Emissions.

- Minimize unnecessary construction vehicle idling time. The ability to limit construction vehicle idling time will depend on the sequence of construction activities and when and where vehicles are needed or staged. Certain vehicles, such as large diesel-powered vehicles, have extended warm-up times following start-up that limit their availability for use following start-up. Where such diesel-powered vehicles are required for repetitive construction tasks, these vehicles may require more idling time. The project will apply a "common sense" approach to vehicle use, so that idling is reduced as far as possible below the maximum of 5 consecutive minutes allowed by California law; if a vehicle is not required for use immediately or continuously for construction activities, its engine will be shut off. Construction foremen will include briefings to crews on vehicle use as part of pre-construction conferences. Those briefings will include discussion of a "common sense" approach to vehicle use.
- Maintain construction equipment in proper working conditions in accordance with PG&E standards.
- Minimize construction equipment exhaust by using low-emission or electric construction equipment where feasible. Portable diesel fueled construction equipment with engines 50 hp or larger and manufactured in 2000 or later will be registered under the CARB Statewide Portable Equipment Registration Program.
- Minimize welding and cutting by using compression of mechanical applications where practical and within standards.
- Encourage use of natural gas powered vehicles for passenger cars and light-duty trucks where feasible and available.
- Encourage the recycling of construction waste where feasible.

APM GHG-2: Minimize SF_6 Emissions.

- Incorporate Sanger Substation into PG&E's system-wide SF_6 emission reduction program. CARB has adopted the Regulation for Reducing Sulfur Hexafluoride Emissions from Gas Insulated Switchgear sections 95350 to 95359, title 17, California Code of Regulations, which requires that company-wide SF_6 emission rate not exceed 1 percent by 2020. Since 1998, PG&E has implemented a programmatic plan to inventory, track, and recycle SF_6 inputs, and inventory and monitor system-wide SF_6 leakage rates to facilitate timely replacement of leaking breakers. PG&E has improved its leak detection procedures and increased awareness of SF_6 issues within the company. X-ray technology is now used to inspect internal circuit breaker components to eliminate dismantling of breakers, reducing SF_6 handling and accidental releases. As an active member of USEPA's SF_6 Emission Reduction Partnership for Electrical Power Systems, PG&E has focused on reducing SF_6 emissions from its transmission and distribution operations and has reduced the SF_6 leak rate by 89 percent and absolute SF_6 emissions by 83 percent.
- Require that the breakers at Sanger Substation have a manufacturer's guaranteed maximum leakage rate of 0.5 percent per year or less for SF_6.
- Maintain substation breakers in accordance with PG&E's maintenance standards.
- Comply with California Air Resources Board Early Action Measures as these policies become effective.

Impacts on Greenhouse Gases

Table 5.7-2 includes the significance criteria from Appendix G of the CEQA Guidelines' greenhouse gases section to evaluate the environmental impacts of the proposed project.

Table 5.7-2 Greenhouse Gases Checklist

Would the project:	Potentially Significant Impact	Less Than Significant with Mitigation Incorporation	Less Than Significant Impact	No Impact
a. Generate greenhouse gas emissions, either directly or indirectly, that may have a significant impact on the environment?	☐	☐	☒	☐
b. Conflict with any applicable plan, policy or regulation of an agency adopted for the purpose of reducing the emissions of greenhouse gases?	☐	☐	☒	☐

a. Would the Project generate greenhouse gas emissions, either directly or indirectly, that may have a significant impact on the environment?

LESS THAN SIGNIFICANT IMPACT

In the absence of a rulemaking by CARB to establish a statewide GHG emission significance threshold, the CPUC assesses the impacts of GHG emissions on a case-by-case basis. The SJVAPCD has adopted guidance for assessing and reducing the impacts of project-specific GHG emissions, as described in Section 5.7.2., which relies on the use of performance based standards or BPS to assess significance as required by CEQA. However, the current list of BPS developed by the SJVAPCD for stationary sources does not include specific performance standards for substations or other electrical facilities.

In areas of California where the local air pollution control district has not adopted a threshold of significance, as is the case with SJVAPCD, the CPUC typically applies a significance threshold from another district. Here, CPUC has chosen to use the South Coast Air Quality Management District's (SCAQMD's) interim significance threshold for stationary sources as a reference value for impact assessment under this criterion. The SCAQMD approach establishes a significance threshold of 10,000 metric tons CO_2e per year for the construction emissions amortized over a 30-year project lifetime, plus annual operation emissions (SCAQMD 2008).

Construction

During construction of the proposed project, GHGs (primarily CO_2) would be emitted from the engine exhaust of diesel- and gasoline-fueled construction equipment and on-road vehicles (e.g., delivery trucks, light-duty vehicles, off-road construction equipment, heavy-duty diesel vehicles, and worker vehicles). GHG emissions resulting from installation of two dishes on the existing tower at the Fence Meadow Repeater Station would be negligible given the minimal truck and equipment trips (2 truck trips per day for a week and 2 crane trips total) and would not contribute significantly to construction GHG emissions. In total, proposed project construction activities, without application of the APMs described in Section 5.7.3, would generate approximately 825 $MTCO_2e$ of emissions as shown in Table 5.7-3. Amortized over 30 years, this would be equivalent to 28 $MTCO_2e$ per year. Detailed emissions calculations and assumptions are presented in Appendix C.

Table 5.7-3 Estimated Construction Unmitigated Greenhouse Gas Emissions

Greenhouse Gas Emissions	Total Project ($MTCO_2e$)
Carbon Dioxide (CO_2)	821
Methane (CH_4)	4
Total	825
Amortized construction emissions (30-year period)	28

$MTCO_2e$ metric tons of carbon dioxide equivalents

Operation and Maintenance

The expansion of the substation would include the replacement of old SF_6 circuit breakers with new SF_6 circuit breakers with an improved leakage rating, and an overall increase of 15 SF_6 circuit breakers, with a net increase in the potential for leakages of SF_6. Estimated GHG emissions from project operations associated with the incremental increase in SF_6-containing equipment, without implementation of APMs, are presented in Table 5.7-4. The emissions are expressed in terms of CO_2e. The total project estimated emissions from operation and maintenance due to SF_6 leakage would be 404 $MTCO_2e$ per year.

Table 5.7-4 Operation and Maintenance Unmitigated GHG Emissions

Equipment	Emissions ($MTCO_2e$ per Year)
Sulfur hexafluoride (SF_6) leakage from 15 additional breakers	404

$MTCO_2e$ metric tons of carbon dioxide equivalents

Notes:

Estimated emissions do not account for the partial offset that would result from the replacement of 8 old SF_6 circuit breakers with new SF_6 circuit breakers, which have an improved leakage rating and therefore would reduce annual SF_6 emissions compared to baseline. Calculation assumes 15 net additional breakers and an annual SF_6 mass leakage rate of 1.0 percent per breaker, which is required under CARB regulations starting in 2020. Although the substation would be in operation in 2018, it is reasonable to assume based on APM GHG-2 that PG&E would purchase equipment that would allow them to, at a minimum, comply with the 2020 SF_6 requirements.

In addition to SF_6 gas emissions, the use of equipment and vehicles during routine operations and maintenance would emit CO_2 and CH_4 from engine exhaust of diesel- and gasoline-fueled vehicles. However, because equipment and vehicle use for routine operations and maintenance would not substantially differ from baseline conditions, there would be no increase in these emissions, and no impact.

Total Project GHG Emissions

The proposed project's total annual GHG emissions have been estimated by adding estimated construction emissions, amortized over 30 years, to estimated operational emissions per year. The SCAQMD's adopted significance threshold for GHG emissions is 10,000 $MTCO_2e$ per year. Table 5.7-5 shows the total annual GHG emissions for the proposed project in comparison with the SCAQMD's significance threshold.

Table 5.7-5 Overall Unmitigated Greenhouse Gas Emissions of the Proposed Project

Emission Source	Annual GHG Emissions ($MTCO_2e$ per Year)
Sulfur hexafluoride (SF_6) leakage during operations	404
Amortized construction emissions (30-year period)	28
Annualized GHG Emissions	432
Exceeds SCAQMD GHG Threshold of 10,000 $MTCO_2e$ per year?	No

GHG greenhouse gas
$MTCO_2e$ metric tons of carbon dioxide equivalents
SCAQMD South Coast Air Quality Management District

The estimated level of GHG emissions, which were obtained without implementation of APMs, are below the significance threshold set by SCAQMD and, therefore, the proposed project would not generate GHG emissions that would, directly or indirectly, have a significant effect on the environment. Impacts associated with the GHG emissions would be less than significant.

PG&E would implement APM GHG-1, which would further reduce GHG emissions during construction, amortized over a 30-year period, by about 13 percent. PG&E would also implement APM GHG-2, which would reduce SF_6 leakage rate to 0.5 percent per year. The total annual GHG emissions after application of APM GHG-1 and APM GHG-2 for the proposed project are presented in Table 5.7-6.

Table 5.7-6 Overall Greenhouse Gas Emissions of the Proposed Project with APM GHG-1 and APM GHG-2

Emission Source	Annual GHG Emissions ($MTCO_2e$ per Year)
Sulfur hexafluoride (SF_6) leakage during operations	202
Amortized construction emissions (30-year period)	24
Annualized GHG Emissions	226
Exceeds SCAQMD GHG Threshold of 10,000 $MTCO_2e$ per year?	No

GHG greenhouse gas
$MTCO_2e$ metric tons of carbon dioxide equivalents
SCAQMD South Coast Air Quality Management District

Therefore, total annualized GHG emissions from the project after implementation of APMs would be approximately 226 $MTCO_2e$ per year. Impacts would remain less than significant.

b. Would the Project conflict with any applicable plan, policy or regulation of an agency adopted for the purpose of reducing the emissions of greenhouse gases?

LESS THAN SIGNIFICANT IMPACT

The proposed project's GHG emissions would not exceed regional or quantitative thresholds developed to comply with AB 32 and California Climate Change Scoping Plan statewide reduction targets; therefore, the proposed project would not conflict with an applicable plan, policy, or regulation adopted for the purpose of reducing GHG emissions. Project construction and operation would result in emissions covered by several relevant plans, policies, and regulations. Table 5.7-7 contains an analysis of conformity with those plans, policies, and regulations.

Table 5.7-7 Project Conformity with Plans, Policies, and Regulations

Plan, Policy, or Regulation	Consistency Analysis
Federal vehicle emissions standards	The proposed project would utilize vehicles subject to federal vehicle regulations and would therefore utilize vehicles that comply with federal vehicle emissions standards. The proposed project would not conflict with this regulation.
Mandatory reporting of greenhouse gas emissions	The proposed project would not emit 25,000 metric tons or more of GHGs per year, as discussed under significance criterion (a). Therefore, an annual report to the US Environmental Protection Agency would not be required and the proposed project would not conflict with this regulation.
AB 32 and Scoping Plan	The proposed project would be subject to and comply with policies and measures in the AB 32 Scoping Plan that have been and will be implemented as regulations. The Scoping Plan sets forth GHG reduction measures such as the Low Carbon Fuel Standard, light and heavy-duty GHG standards, energy efficiency, and recycling and waste reduction. The proposed project would be in compliance with all of the fuel and vehicle standards and would dispose of and recycle all project waste in the appropriate manner, as required by law. The proposed project's GHG emissions would not exceed regional quantitative thresholds developed to comply with AB 32 and the California Climate Change Scoping Plan statewide reduction target. The proposed project would therefore not conflict with AB 32.
Executive Order S-3-05	Recognizing the state's susceptibility to climate change impacts, this Executive Order established statewide GHG emission reduction targets of 2000 levels by 2010, 1990 levels by 2020, and 80 percent below 1990 levels by 2050. The proposed project would not significantly increase GHG emissions in the project area during construction and during operations and maintenance, as previously discussed. GHG emissions from the proposed project would not exceed regional quantitative thresholds developed to comply with AB 32 and the California Climate Change Scoping Plan statewide reduction target. The proposed project would therefore not conflict with Executive Order S-3-05
AB 1493—Pavley	The proposed project would use vehicles subject to state vehicle regulations and would therefore utilize vehicles that comply with state vehicle emissions standards. The project would not conflict with AB 1493.
Executive Order S-01-07—Low Carbon Fuel Standard	Fuels purchased for the proposed project would be in compliance with the Low Carbon Fuel Standard. The project would not conflict with the low carbon fuel standard.
California Renewable Energy Programs	In 2002, California initially established its Renewables Portfolio Standard, with the goal of increasing the percentage of renewable energy in the state's electricity mix to 20 percent by 2017. State energy agencies recommended accelerating that goal, and California Executive Order S-14-08 (November 2008) required California utilities to reach the 33 percent renewable electricity goal by 2020, consistent with the AB 32 Scoping Plan. SB X1-2 expressly applies the new 33 percent Renewables Portfolio Standard by December 31, 2020, to all retail sellers of electricity and establishes renewable energy standards for interim years prior to 2020. The proposed project does not involve a decrease or increase in renewable energy generation or aim to specifically increase import of renewable energy. There would be no conflict with the California Renewable Energy Programs.

Table 5.7-7 Project Conformity with Plans, Policies, and Regulations

Plan, Policy, or Regulation	Consistency Analysis
Executive Order B-30-15	Executive Order B-30-15 establishes a new interim statewide GHG emission reduction target of 40 percent below 1990 levels by 2030. The interim GHG reduction target was established to ensure that California meets its goal of reducing GHG emissions to 80 percent below 1990 levels by 2050. Executive Order B-30-15 requires state agencies to consider climate change in their planning and investment decisions, giving priority to actions that reduce GHG emissions. The proposed project would not significantly increase GHG emissions in the project area during construction and during operations and maintenance, as previously discussed. The proposed project would therefore not conflict with Executive Order B-30-15.
Advanced Clean Cars Program	Vehicles with a model year from 2017 to 2025 purchased for use for the proposed project would comply with regulations in the Advanced Clean Cars Program. The proposed project would not conflict with the Advanced Clean Cars Program.
Heavy-Duty Truck GHG Regulations	Certain vehicles used for the proposed project would be subject to heavy-duty truck and trailer regulations. Heavy duty trucks and trailers that comply with state regulations would be used. The proposed project would therefore not conflict with heavy-duty truck GHG regulations.
On-Road Heavy Duty Diesel Vehicle Regulations	Certain vehicles used for the proposed project would be subject to heavy-duty truck and trailer regulations. Heavy duty trucks and trailers that comply with state regulations would be used. The proposed project would therefore not conflict with on-road heavy-duty diesel vehicle regulations.
State Regulations for Reducing SF_6 Emissions from Gas Insulated Switchgear (17 CCR Sections 95350 to 95359)	By 2020, the maximum emission requirement would be 1 percent per year for all gas-insulated equipment; the applicant would only purchase and install gas-insulated equipment with a manufacturer's certified SF_6 leak rate of 0.5 percent per year or less, and implement SF_6 best management practices during operations and maintenance of the proposed project. The applicant would be required to report SF_6 inventories and emissions from the use of gas-insulated electrical equipment at the proposed Sanger Substation pursuant to California Air Resources Board's Regulation for Reducing Sulfur Hexafluoride Emissions from Gas Insulated Switchgear (17 CCR Sections 95350 to 95359). The proposed project would not conflict with state SF_6 regulations.
California Green Building Code (CCR, Title 24, Part 11)	The project proponent would be required to comply with nonhazardous construction and demolition waste requirements, as outlined in the California Green Building Code, for the construction and demolition of nonresidential building structures. Therefore, the proposed project would not conflict with this regulation.
AB 1826	The project proponent would be required to recycle their organic waste, depending on the amount of waste generated per week. Construction of the proposed project would result in the generation of various waste materials, which would all be salvaged, recycled, or disposed of in the appropriate manner and in compliance with applicable regulations. Therefore, the proposed project would not conflict with this regulation.

Table 5.7-7 Project Conformity with Plans, Policies, and Regulations

Plan, Policy, or Regulation	Consistency Analysis
SJVAPCD Climate Change Action Plan, Guidance for Valley Land-use Agencies in Addressing GHG Emission Impacts for New Projects under CEQA, District Policy: Addressing GHG Emission Impacts for Stationary Source Projects Under CEQA When Serving as the Lead Agency	In December 2009, the SJVAPCD Board approved two guidance documents: Guidance for Valley Land-use Agencies in Addressing GHG Emission Impacts for New Projects under CEQA and District Policy: Addressing GHG Emission Impacts for Stationary Source Projects Under CEQA When Serving as the Lead Agency. These documents provide that "Projects complying with an approved GHG emission reduction plan or GHG mitigation program which avoids or substantially reduces GHG emissions within the geographic area in which the Project is located would be determined to have a less than significant individual and cumulative impact for GHG emissions." The proposed project would be subject to and comply with policies and measures in the AB 32 Scoping Plan that have been and will be implemented as regulations. The proposed project would be in compliance with the low carbon fuel standards, all of the light duty and medium/heavy-duty vehicle standards, and the waste disposal and recycling procedures. The proposed project's GHG emissions would not exceed regional or quantitative thresholds developed to comply with AB 32 and the California Climate Change Scoping Plan statewide reduction target. Therefore, the proposed project would be determined to have a less than significant individual and cumulative impact for GHG emissions and would not conflict with the SJVAPCD Board Plan.

AB	Assembly Bill
CCR	California Code of Regulations
CEQA	California Environmental Quality Act
GHG	greenhouse gas
proposed project	Sanger Substation Expansion Project
SF_6	sulfur hexafluoride
SJVAPCD	San Joaquin Valley Air Pollution Control District

1

This page intentionally left blank.

5.8 Hazards and Hazardous Materials

This section describes the environmental and regulatory setting and discusses impacts associated with the construction and operation of the Sanger Substation Expansion Project (proposed project) proposed by Pacific Gas and Electric Company (PG&E, or the applicant) with respect to hazards and hazardous materials.

5.8.1 Environmental Setting

Hazardous Materials

Hazardous materials[1] are currently used at the existing Sanger Substation within transformers, circuit breakers, battery rooms, and other electrical equipment. These materials include sulfur hexafluoride (SF_6)[2], sulfuric acid, and petroleum hydrocarbon-derived electrical insulation oil (PG&E 2015). Oils in the Sanger Substation equipment may have legacy polychlorinated biphenyls (PCBs) at elevated concentrations (PG&E 2015).

Hazardous Waste and Substances Sites

The applicant hired Environmental Data Resources, Inc. (EDR) to conduct a database analysis to determine the location of hazardous wastes and hazardous material release sites within 0.25 miles of the proposed project because 0.25 miles is a typical distance used to identify potential sites not in the project area that may have contamination that could migrate into the project area. This analysis involved database searches from local, state, and federal agencies with varying levels of enforcement related to the generation, storage and handling, transportation, and treatment of wastes, as well as emergency response activities and remediation of contaminated soil and groundwater sites. This report did not identify any hazardous waste or hazardous material release sites within 0.25 miles of the proposed project. The report does identify a historic underground petroleum storage tanks site 0.10 miles east of the proposed project (EDR 2012). The database contains no additional information concerning the status of the underground storage tanks or whether there was a release (DTSC 2015; EDR 2012; SWRCB 2015).

In addition to EDR's search, the California Public Utilities Commission (CPUC) searched the State Water Resource Control Board's Geotracker database, Cease and Desist Orders and Cleanup and Abatement Orders list; California Environmental Protection Agency's highly hazardous solid waste sites; and the California Department of Toxic Substance Control's (DTSC's) EnviroStor database and hazardous waste sites. These sources are often collectively referred to as the "Cortese List," and are listed in Government Code Section 65962.5. A search of the Cortese List databases found no active Cortese List sites within 0.25 miles of the proposed project (DTSC 2015; EDR 2012; SWRCB 2015).

Emergency Evacuation Routes

The Fresno County's emergency plan does not identify roads in the project area (i.e., East Jensen Avenue and South McCall Avenue) as major transportation or emergency routes (Fresno County 2009). All project-related construction would occur on applicant-owned property or adjacent private property. Some

[1] The term *hazardous material* is defined as any material that, because of quantity, concentration, or physical or chemical characteristics, poses a significant present or potential hazard to human health and safety or to the environment (California Health and Safety Code Chapter 6.95, Section 25501(o)).

[2] SF_6 is a colorless, odorless, and relative nontoxic gas used for electrical circuit breakers, electrical piping, and as a gaseous insulator. It is listed as a hazardous material because it is regulated by the Occupational Safety and Health Administration (OSHA). While SF_6 is inert during normal use, toxic byproducts can be produced when electrical discharges occur within SF_6-filled equipment.

activities, such as equipment delivery, could temporarily affect traffic on East Jensen Avenue and South McCall Avenues.

Airports

The proposed project would not be located near any public or public use airstrip. The closest private airstrip is Fresno Yosemite International Airport, 6.5 miles northwest of the proposed project area. Reedley Municipal Airport, a public airport, is 9.2 miles east southeast of the project area. The closest private airstrip is Del Rey Juice Airstrip, 3.6 miles south of the project area.

Schools

No schools are located within 0.25 miles of the proposed project site. The closest school, Ronald W. Reagan Elementary is located 1.6 miles northeast of the proposed project site. (FCOE 2016)

Wildfire Hazards

The California Department of Forestry and Fire Protection (CAL FIRE) identifies and maps areas of significant fire hazards based on fuels, terrain, weather, and other relevant factors (CAL FIRE 2012a). CAL FIRE maps indicate that the project area and vicinity are within a Local Responsibility Area (LRA), within which local government is responsible for wildland fire protection. The LRA is an Unzoned LRA, which indicates less-than-moderate susceptibility to wildland fire conflagrations. CAL FIRE has determined that Fresno County does not contain Very High Fire Hazard Severity Zones in any of its LRAs (CAL FIRE 2007). The Fence Meadow Repeater Station is in a Very High Fire Hazard Severity Zone (CAL FIRE 2012b). The station is located in the Sierra National Forest, within a Federal Responsibility Area (FRA). Fire protection services and equipment near the project alignment are discussed in detail in Section 5.14, “Public Services.”

5.8.2 Regulatory Setting

Federal

Resource Conservation and Recovery Act

The Resource Conservation and Recovery Act (RCRA) regulates hazardous waste from the time that waste is generated through to its management, storage, transport, treatment, and final disposal. The United States Environmental Protection Agency (EPA) has authorized the California DTSC to administer the State’s RCRA programs. A RCRA hazardous waste exhibits at least one of four characteristics: ignitability, corrosivity, reactivity, or toxicity. To keep track of hazardous waste activities, treatment, storage, and disposal facility owners and operators must keep certain records and submit reports to the EPA at regular intervals. All facilities that generate, transport, recycle, treat, store, or dispose of hazardous waste are required to notify the EPA (or its state agency) of their hazardous waste activities. An EPA Identification Number must be obtained unless the waste has been excluded from regulation or exempted. National Biennial RCRA Hazardous Waste Reports Sections 3002 and 3004 of RCRA require that the EPA collect information pertaining to hazardous waste management from hazardous waste generators and hazardous waste treatment, storage, and disposal facilities every two years. Used hazardous waste from construction and operation of the proposed project are regulated under this act.

Hazardous Materials Transportation Act

The primary objective of the Hazardous Materials Transportation Act is to provide adequate protection against risks to life and property inherent in the transportation of hazardous materials in commerce. This act empowers the United States Department of Transportation to regulate the transportation of hazardous materials by rail, aircraft, vessel, or public highway. Hazardous materials regulations are subdivided by

function into the following four areas within 49 Code of Federal Regulations (CFR) Parts 101, 106, 107, 171 to 177, and 178 to 180: Procedures and/or Policies, Material Designations, Packaging Requirements, and Operational Rules. The transportation of all hazardous materials to and from the proposed project area during construction and operation would be regulated by this act.

Oil Pollution Prevention

The objective of the oil pollution prevention regulation stated in 40 CFR Part 112 is to prevent oil discharges from reaching navigable waters of the United States or adjoining shorelines. This regulation was also written to ensure effective response to oil discharge. The regulation further requires that proactive measures be used to respond to oil discharge. It contains two major types of prevention requirements (the Spill Prevention, Control, and Countermeasure [SPCC] rule) and Facility Response Plan requirements. The SPCC plan for the Sanger Substation would be updated per applicant proposed measure (APM) HAZ-1.

Occupational Safety and Health Standards

The Occupational Safety and Health Standards (CFR Title 29) are regulations for safety in the workplace and construction safety, including safety regarding the use of helicopters for construction. Occupational Health and Safety Administration (OSHA) standards require implementation of a Hazard Communication Plan to identify and inventory all hazardous materials and material safety data sheets. OSHA's standards also require employee training in safe handling of hazardous materials. OSHA standards are relevant to the proposed project because its construction and operation would involve the use of heavy-duty and lighter vehicles that may pose health and safety risks to workers. In addition, workers would handle and use chemical substances.

United States Forest Service Sierra National Forest Land Management Plan

Two dishes would be installed on an existing tower at the Fence Meadow Repeater Station, which is on land managed by the U.S. Forest Service. The Sierra National Forest Land and Resource Management Plan includes the following management directions for protection of the Forest from wildfire: encourage adequate fire prevention, fire-safe construction and presuppression systems on private land to be developed in wildfire-prone areas; increase fire prevention, presuppression, fuelbreak systems and fire safety programs on forest land; reduce activity fuels to acceptable levels in a cost effective manner; encourage cooperation and coordination with appropriate fire management agencies; and, provide intensive law enforcement (USFS 1991).

State

Hazardous Materials and Waste

California Health and Safety Code (HSC) Section 25501 defines the term *hazardous material* as any material that, because of quantity, concentration, or physical or chemical characteristics, poses a significant present or potential hazard to human health and safety or to the environment. Hazardous materials include, but are not limited to, hazardous substances, hazardous waste, and any material that a handler or the administering agency has a reasonable basis for believing would be injurious to the health and safety of persons or harmful to the environment if released into the workplace or the environment. Title 8, Section 339 of the California Code of Regulations (CCR) lists substances identified as *hazardous substances* for which employers must provide material safety data sheets to employees.

CCR Title 22, Section 66261.1 identifies those wastes which are subject to regulation as hazardous wastes and that are subject to the notification requirements pursuant to the California HSC. The HSC defines a waste as hazardous if it has any of the following characteristics: ignitability, corrosivity, reactivity, and toxicity. It also provides lists of hazardous wastes listed pursuant to RCRA, non-RCRA hazardous wastes,

hazardous wastes from specific sources, extremely hazardous wastes, hazardous wastes of concern, and special wastes. The EPA has authorized the California DTSC to administer the RCRA program in California.

Under federal regulations, transformer oil, under most intended uses, would become used oil, the recycling of which is regulated by 40 CFR 279. Use resulting in chemical or physical change or contamination may also subject it to regulation as hazardous waste, which is also managed under 40 CFR 279. In California, however, all used oil is managed as hazardous waste until tests have shown that it is not hazardous (HSC Section 25250.4). Requirements for the transport of hazardous waste, including driver training, are established in CCR Title 26.

Treated Wood Waste

Section 25150.7 of the California HSC outlines procedures and regulations for the management and disposal of treated wood waste. Wood waste, including the type of wood utility poles that would be disposed of as part of the proposed project, may be treated with pesticides and other chemicals to protect the wood. Because the chemical treatments could leach into water supplies when disposed of, Section 25150.7 was developed to restrict how and where treated wood waste can be disposed of.

Certified Unified Program Agency and Hazardous Materials Plans

Administration of the Certified Unified Program Agency (CUPA) is authorized by the California HSC (Chapter 6.11, Sections 25404-25404.8) and CCR Title 27, Division 1, Subdivision 4, Chapter 1, Sections 15100–15620. This program is implemented at the local level by government agencies certified by the secretary of the California Environmental Protection Agency. The Fresno County Environmental Health Division is the CUPA for Fresno County.

Hazardous Materials Release Response Plans and Inventory Act of 1985

The Hazardous Materials Release Response Plans and Inventory Act, also known as the Business Plan Act, requires businesses using hazardous materials to prepare a plan that describes their facilities, inventories, emergency response plans, and training programs. Hazardous materials are defined under the Business Plan Act as raw or unused materials that are part of a process or manufacturing step. Health concerns pertaining to the release of hazardous materials are similar to those relating to hazardous waste.

California HSC Section 25503.5 requires a business plan for emergency response for facilities that store hazardous materials in excess of 55 gallons (liquid), 500 pounds (solid), or 200 cubic feet (gas). Facilities that handle more than these indicated quantities of hazardous materials must submit a Hazardous Materials Business Plan (HMBP) to the CUPA, prior to project construction. In California, all used oil is managed as hazardous waste until tests have shown it is not hazardous (HSC Section 25250.4). The applicant would be required to submit an HMBP to the CUPA for project construction and operation. In general, HMBPs describe and identify storage areas for hazardous materials and waste; describe appropriate handling, storage, and disposal techniques; and include measures for avoiding and addressing spills pursuant to California HSC Section 25504.

Hazardous Waste Control Act

The Hazardous Waste Control Act established the state hazardous waste management program, which is similar to, but more stringent than, RCRA program requirements. CCR Title 26 describes the requirements for the proper management of hazardous waste under the Hazardous Waste Control Act, including the following:

- Identification and classification;

- Generation and transportation;
- Design and permitting of recycling, treatment, storage, and disposal facilities;
- Treatment standards;
- Operation of facilities and staff training; and
- Closure of facilities and liability requirements.

These regulations list more than 800 materials that may be hazardous and establish criteria for the identification, packaging, and disposal of such waste. Under the Hazardous Waste Control Act, and Title 26, the generator of hazardous waste must document waste from generation to transporter to disposal. Copies of this documentation must be filed with the California DTSC.

The California DTSC operates programs to protect California from exposure to hazardous wastes through the following practices and procedures:

- Handling of the aftermath of improper hazardous waste management by overseeing site cleanup;
- Prevention of the release of hazardous waste by ensuring that those who generate, handle, transport, store, and dispose of wastes do so properly;
- Enforcement against those who fail to appropriately manage hazardous wastes;
- Exploration and promotion of measures to prevent pollution and encourage reuse and recycling;
- Evaluation of site-specific soil, water, and air samples and development of new analytical methods;
- Practice in other environmental sciences, including toxicology, risk assessment, and technology development; and
- Involvement of the public in the California DTSC's decision-making.

Hazardous wastes that may be encountered or generated during the construction and operation of the proposed project would be subject to the requirements of the Hazardous Waste Control Act.

Government Code Section 65962.5: Cortese List

The Cortese List includes all hazardous waste facilities subject to corrective action; land designated as hazardous waste property or border zone property; information received from the California DTSC about hazardous waste disposals on public land; sites listed pursuant to the California HSC Section 25356 (removal and remedial action sites); and sites included in the Abandoned Site Assessment Program. Pursuant to Government Code Section 65962.5, the California DTSC compiles and updates the Cortese List as appropriate, but at least annually.

California Occupational Health and Safety Administration

The California Occupational Health and Safety Administration (CalOSHA) is responsible for the development and enforcement of workplace safety standards and ensuring worker safety in the handling and use of hazardous materials. CalOSHA requires businesses to prepare Injury and Illness Prevention Plans and Chemical Hygiene Plans. Its Hazards Communication Standard requires that workers be informed of the hazards associated with the materials they handle. Manufacturers are required to label containers, provide material safety data sheets in the workplace, and provide worker training.

The employer is required to monitor worker exposure to listed hazardous substances and notify workers of exposure (8 CCR Sections 337-340). The regulations specify requirements for employee training, availability of safety equipment, accident-prevention programs, and hazardous substance exposure warnings. Similar to the federal OSHA, CalOSHA contains requirements to prevent worker exposure to certain types of hazardous substances in the work place, such as asbestos and lead. Specifically, exposure of construction workers to lead is controlled by the Lead Standard and the exposure of workers to asbestos containing materials is controlled by the asbestos Construction Standard.

Underground Service Alert (DigAlert)

California Government Code 4216 et seq. defines mandatory notification procedures for subsurface excavations and installations. Pursuant to Section 4216 et seq., the applicant must contact the Underground Service Alert of Southern California, also known as DigAlert, at least two working days but no more than 14 days prior to conducting excavation activities for each component of the proposed project (DigAlert 2014).

Local

San Joaquin Valley Air Pollution Control District (SJVAPCD)

The SJVAPCD implements air quality programs required by state and federal mandates, enforces rules and regulations based on air pollution laws, and educates businesses and residents about their roles in protecting air quality. One such program is the asbestos program. Asbestos is a TAC (as defined by Title 17, California Code of Regulation, § 93000. Substances Identified As Toxic Air Contaminants). The SJVAPCD regulates ACM for demolition and renovations of regulated facilities. An Asbestos Notification form is required for any regulated demolition, whether or not asbestos is present, and for certain regulated renovations. A Demolition Permit Release form is required for all demolitions, including for facilities exempt from NESHAP.

Regional Water Quality Control Board and Stormwater Pollution Prevention Plans

Under the National Pollutant Discharge Elimination System, California's Regional Water Quality Control Boards require a Construction Activities Storm Water General Permit (Order 2009-0009-DWQ) for stormwater discharges associated with any construction activity including clearing, grading, excavation reconstruction, and dredge and fill activities that results in the disturbance of at least one acre of total land area. Since the proposed project would disturb more than one acre, this permit would be required, along with a Stormwater Pollution Prevention Plan (SWPPP). SWPPPs require the use of site-specific best management practices during construction to reduce the potential for erosion and sedimentation and for vehicle and equipment fueling and maintenance, material storage, spill prevention, and waste management. In Fresno County, permits are administered by the Central Valley Regional Water Quality Control Board.

Fresno County Multi-Hazard Mitigation Plan

The *Fresno County Multi-Hazard Mitigation Plan*, which includes the *Fresno County Operational Area Master Emergency Services Plan*, identifies and analyzes existing hazards (such as earthquakes, fire, drought, and severe weather), assesses community vulnerability and mitigation capabilities, and provides mitigation strategies, a mitigation action plan, and an implementation program. The plan covers the entire proposed project area and identifies that the proposed project site is located within the dam failure inundation area associated with Pine Flat Dam (see Section 5.9.1 of the plan). Specific evacuation and emergency response routes have not been defined in the proposed project area.

Fresno County General Plan

The *Fresno County General Plan* provides policy direction for land development in unincorporated Fresno County. The Health and Safety Element of the plan defines an electrical substation as a critical facility and also includes the following policy that is relevant to the proposed project:

- ***Policy HS-B.3.*** *The County shall require that development in high fire hazard areas have fire-resistant vegetation, cleared fire breaks separating communities or clusters of structures from native vegetation, or a long-term comprehensive vegetation and fuel management program. Fire hazard reduction measures shall be incorporated into the design of development projects in fire hazard areas.*
- ***Policy HS.B.5.*** *The County shall require development to have adequate access for fire and emergency vehicles and equipment. All major subdivisions shall have a minimum of two (2) points of ingress and egress.*
- ***Policy HS-D.7.*** *The County shall ensure compliance with State seismic and building standards in the evaluation, design, and siting of critical facilities.*
- ***Policy HS-F-1.*** *The County shall require that facilities that handle hazardous materials or hazardous wastes to be designed, constructed, and operated in accordance with application hazardous materials and waste management laws and regulations.*
- ***Policy HS-F.5.*** *The County shall require that demolition of structures where friable asbestos or other hazardous materials could be released into the environment comply with applicable regulations and standards.*

5.8.3 Environmental Impacts and Assessment

Applicant Proposed Measures

The applicant has incorporated APMs into the proposed project to specifically minimize or avoid impacts from hazards and hazardous materials caused by the proposed project; these are listed below. A list of all project APMs is included in Table 4-5.

APM HAZ-1, Spill Prevention, Control, and Countermeasure. In the event of an accidental spill, the substation is equipped with a retention basin that meets Spill Prevention, Control, and Countermeasure (SPCC) Guidelines (40 Code of Federal Regulations 112). The retention basin is sufficiently sized to accommodate the accidental spill of all mineral oil from the largest transformer in the substation. The substation will also be equipped with lead-acid batteries to provide backup power for monitoring, alarm, protective relaying, instrumentation and control, and emergency lighting during power outages. Containment will be constructed around and under the battery racks, and the SPCC will address containment from a battery leak.

A site-specific SPCC plan will be prepared prior to the initiation of construction.

APM HAZ-2, Emergency Spill Response Equipment and Training. Emergency spill response and clean up kits will be available onsite and at the Fresno PG&E Service Yard Headquarters. The kits will be readily available for the cleanup of an accidental spill at the substation. Construction crews will be trained in safe handling and cleanup responsibilities prior to the initiation of construction.

APM HAZ-3, Shock Hazard. All authorized personnel working on site, during either construction or maintenance and operation, will be trained in accordance with PG&E standards. To minimize potential exposure of the public to electric shock hazards, an 8-foot-tall chain link fence topped with 1 foot of barbed wire will extend around the perimeter of the expanded substation for a total of

approximately 9 feet, thus restricting site access. Warning signs will be posted to alert persons of potential electrical hazards. All electric power lines will be designed in accordance with California Public Utilities Commission General Order 95 Guidelines for safe ground clearances established to protect the public from electric shock.

APM HAZ-4, Soil Testing and Disposal. In the event that soils suspected of being contaminated (on the basis of visual, olfactory, or other evidence) are removed during site grading activities or excavation activities, the excavated soil will be tested and if contaminated above hazardous waste levels, will be contained and disposed of at a licensed waste facility. The presence of known or suspected contaminated soil will require testing and investigation procedures to be supervised by a qualified person, as appropriate, to meet state and federal regulations.

Hazards and Hazardous Materials Impacts

Table 5.8-1 includes the significance criteria from Appendix G of the California Environmental Quality Act Guidelines for hazards and hazardous materials to evaluate the environmental impacts of the proposed project. There are no schools within 0.25 miles of the proposed project site; therefore, there would be no impact to schools and no detailed discussion of significance criterion (c) is provided. The proposed project would not be located within an airport land use plan or within 2 miles of a public airport or public use airport. The proposed project would not be in the vicinity of a private airstrip. There would be no safety impacts related to public airports, public use airports, or private airstrips. Therefore, detailed discussions for significance criteria (e) and (f) are not provided.

Table 5.8-1 Hazards and Hazardous Materials Checklist

Would the project:	Potentially Significant Impact	Less Than Significant with Mitigation Incorporation	Less Than Significant Impact	No Impact
a. Create a significant hazard to the public or the environment through the routine transport, use, or disposal of hazardous materials?	☐	☒	☐	☐
b. Create a significant hazard to the public or the environment through reasonably foreseeable upset and accident conditions involving the release of hazardous materials into the environment?	☐	☒	☐	☐
c. Emit hazardous emissions or handle hazardous or acutely hazardous materials, substances, or waste within one-quarter mile of an existing or proposed school?	☐	☐	☐	☒
d. Be located on a site which is included on a list of hazardous materials sites compiled pursuant to Government Code Section 65962.5 and, as a result, would it create a significant hazard to the public or the environment?	☐	☒	☐	☐
e. For a project located within an airport land use plan or, where such a plan has not been adopted, within two miles of a public airport or public use airport, would the project result in a safety hazard for people residing or working in the project area?	☐	☐	☐	☒
f. For a project within the vicinity of a private airstrip, would the project result in a safety hazard for people residing or working in the project area?	☐	☐	☐	☒

Table 5.8-1 Hazards and Hazardous Materials Checklist

Would the project:	Potentially Significant Impact	Less Than Significant with Mitigation Incorporation	Less Than Significant Impact	No Impact
g. Impair implementation of or physically interfere with an adopted emergency response plan or emergency evacuation plan?	☐	☐	☒	☐
h. Expose people or structures to a significant risk of loss, injury or death involving wildland fires, including where wildlands are adjacent to urbanized areas or where residences are intermixed with wildlands?	☐	☒	☐	☐

a. Would the project create a significant hazard to the public or the environment through the routine transport, use, or disposal of hazardous materials?

Construction

LESS THAN SIGNIFICANT IMPACT WITH MITIGATION

Hazardous materials would be used during construction and operations. During construction, gasoline, diesel fuel, motor oil, antifreeze, transmission fluids, hydraulic fluids and lubricants, paints, solvents, adhesives, and cleaning chemicals would be used. Existing transformers containing oil and PCBs and the existing battery room containing sulfuric acid would be incorporated into the proposed expanded Sanger Substation and would not be moved. Obsolete SF_6 and oil-containing switches would be replaced by new SF_6-containing switches. The proposed demolition and transmission line rerouting activities may also generate hazardous waste materials, such as chemically treated wood. Asbestos could be found during demolition of transmission poles and towers if it is contained in the structures. Removal or relocation of utility lines requires notification to the SJVAPCD, an asbestos survey conducted by a Certified Asbestos Inspector, and applicable removal and disposal requirements of identified ACM (NESHAP 40 Code of Federal Regulations 61, Subpart M). Compliance with applicable regulations would ensure that asbestos air quality impacts would be less than significant. The routine use of hazardous materials could result in an accidental spill or other avenue of exposure during construction and refueling activities, which could result in a significant impact to the public. Additionally, routine disposal of unidentified contaminated soils could also result in a significant impact to workers. APM HAZ-2 would require that construction crews are trained in safe handling of hazardous materials prior to the initiation of construction activities. APM HAZ-4 would require suspected contaminated soils to be tested. Implementation of these APMs should prevent significant hazards from occurring during routine construction; however, the APMs are not comprehensive enough to mitigate impacts. For example, APM HAZ-2 requires spill response equipment and training, but does not require immediate and thorough cleanup of spills and does not require storage of equipment to contain runoff from contaminated areas from accidental spills. And, APM HAZ-4 requires testing of removed soil suspected of contamination, but does not contain specific details on equipment to keep on site to allow for removal of such soil as well as coordination procedures to follow if contaminated soil is located. Impacts could be significant. Mitigation measure (MM) HAZ-1 would supersede APM HAZ-2 and APM HAZ-4. MM HAZ-1 would require the applicant to prepare and implement a Hazardous Materials Management Plan to ensure that specific actions and protocols are established. Through implementation of MM HAZ-1, potential impacts associated with hazardous materials management would be less than significant.

MM HAZ-1: Hazardous Materials Management Plan (supersedes APM HAZ-2 and APM HAZ-4). Prior to construction, the applicant shall prepare a Hazardous Materials Management Plan, which shall be implemented during construction to prevent the release of hazardous materials and hazardous waste. The plan shall include the following requirements and procedures:

1. Training requirements for construction workers in appropriate work practices, including spill prevention and response measures. Additional training requirements for those performing excavation activities shall be required and shall include training on types of contamination and contaminants (e.g., petroleum hydrocarbons, asbestos, and *hazardous materials* [as defined by the California HSC]) and identifying potentially hazardous contamination (e.g., stained or discolored soil and odor).
2. Contain all hazardous materials at work sites and properly dispose of all such materials.
    a. Hazardous materials shall be stored on pallets within fenced and secured areas and protected from exposure to weather and further contamination.
    b. Fuels and lubricants shall be stored only at designated staging areas.
3. Maintain hazardous material spill kits for small spills at all active work sites and staging areas. Thoroughly clean up all spills as soon as they occur.
4. Store sorbent and barrier materials at all construction staging areas, including staging areas used during activities for decommissioning. Sorbent and barrier materials will be used to contain runoff from contaminated areas and from accidental releases of oil or other potentially hazardous materials.
5. Perform all routine equipment maintenance at a shop or at the staging area and recover and dispose of wastes in an appropriate manner.
6. Monitor and remove vehicles used for construction-related activities with chronic or continuous leaks from use and complete repairs before returning them to operation.
7. Store shovels and drums at the staging areas. If small quantities of soil become contaminated, use shovels to collect the soil and store in drums before proper offsite disposal. Large quantities of contaminated soil may be collected using heavy equipment and stored in drums or other suitable containers prior to disposal. Should contamination occur adjacent to staging areas because of runoff, shovels and/or heavy equipment shall be used to collect the contaminated material. Only trained construction workers shall handle hazardous, and potentially hazardous, materials.
8. Transporting, shipping, and disposal procedures for hazardous waste.
9. Procedures for notifying applicant and agency personnel in the event of the discovery of contaminated soil and/or groundwater. Contact information for federal, regional, and local agencies, the applicant's environmental coordinator(s) responsible for the cleanup of contaminated soil or groundwater, and licensed disposal facilities and haulers.

This plan will be submitted to the CPUC for review and approval 30 days prior to the start of construction of the proposed project.

Operation and Maintenance

LESS THAN SIGNIFICANT IMPACT

Similar to the existing operations, mineral oil would be present in sealed electrical equipment (such as transformers) at Sanger Substation during operation. The amount of mineral oil at the proposed Sanger Substation would be the same as presently located on the site. The proposed project would replace older oil-filled circuit breakers that may contain small amounts of PCBs with new circuit breakers, which would be a beneficial impact. The retention basin would be moved on site, which would cause the SPCC plan for the existing Sanger Substation to be inaccurate. If a spill were to occur while an inaccurate SPCC plan is in place, potentially significant impacts related to spill response and prevention could occur. As described in APM HAZ-1, the applicant would prepare a new SPCC plan for Sanger Substation to address the new substation design and retention basin. Hazardous materials impacts from operation and maintenance activities would be less than significant with implementation of APM HAZ-1.

b. Would the project create a significant hazard to the public or the environment through reasonably foreseeable upset and accident conditions involving the release of hazardous materials into the environment?

Construction

LESS THAN SIGNIFICANT IMPACT WITH MITIGATION

As described under the discussion for impact criterion (a), the applicant would transport, use, or dispose of hazardous materials and petroleum products in accordance with all applicable federal, state, and local regulations. However, accidental releases or spills could still occur, representing a potential hazard to the public and environment during construction and operations, which would be a significant impact. Compliance with applicable regulations and implementation of a SWPPP, HMBP, SPCC plan, APM HAZ-2, and APM HAZ-4 would reduce this risk but not prevent all significant impacts that may still occur from upset and accident conditions involving the release of hazardous materials and wastes. For example, APM HAZ-2 requires spill response equipment and training but does not require immediate and thorough cleanup of spills and does not require storage of equipment to contain runoff from contaminated areas from accidental spills. And APM HAZ-4 requires testing of removed soil suspected of contamination, but does not contain specific details on equipment to keep on site to allow for removal of such soil as well as coordination procedures to follow if contaminated soil is located or if contaminated soil is created during construction. Impacts could be significant. MM HAZ-1 would require the implementation of a Hazardous Materials Management Plan that addresses the significant impacts. MM HAZ-1 would supersede APM HAZ-2 and APM HAZ-4. Implementation of MM HAZ-1would reduce impacts to a less than significant level.

Other potential hazards associated with construction at the electrical substation include the presence of high voltage, open-air conductors that can create a high temperature electrical arc between the electrical conductor and persons or objects. The applicant's power lines and station facilities are designed and constructed with grounding devices and in the event of a lightning strike on a power line, this safety feature ensures that the strike is discharged to appropriate ground. However, impacts would be significant if workers were not informed of proper safety procedures. All workers would be trained in appropriate safety procedures, as described in APM HAZ-3. Impacts on onsite construction workers from high temperature electrical arc would be less than significant with implementation of APM HAZ-3.

Accidental contact with existing underground utility lines or a private utility line such as leach lines associated with a septic system could result in a release of waste materials or could pose a safety risk for the public and workers. Compliance with California Government Code 4216.1 would reduce potential

impacts to public utility lines because underground utilities would be identified and marked prior to construction so that they could be avoided. The potential for the proposed project to damage existing underground infrastructure would be less than significant.

Operation and Maintenance

LESS THAN SIGNIFICANT IMPACT

Similar to the existing operations, mineral oil would be present in sealed electrical equipment (such as transformers) at Sanger Substation during operation. The amount of mineral oil at the proposed Sanger Substation would be the same as presently located on the site. The older oil-filled circuit breakers that could contain small amounts of PCBs would be replaced with newer circuit breakers, which would be a beneficial impact. The retention basin would be moved on site, which would cause the SPCC plan for the existing Sanger Substation to be inaccurate. If a spill were to occur while an inaccurate SPCC plan is in place, potentially significant impacts related to spill response and prevention could occur. As described in APM HAZ-1, the applicant would prepare a new SPCC plan for Sanger Substation to address the new substation design and retention basin. Hazardous materials impacts from operation and maintenance activities would be less than significant with implementation of APM HAZ-1.

d. Would the project be located on a site which is included on a list of hazardous materials sites compiled pursuant to Government Code Section 65962.5 and, as a result, would it create a significant hazard to the public or the environment?

Construction

LESS THAN SIGNIFICANT IMPACT WITH MITIGATION

The proposed project would not be located within 0.25 miles of an open Cortese List site. Therefore, construction of the proposed project would not result in any significant hazard to the public or environment due to affecting existing Cortese List sites.

Ground disturbing activities associated with construction of the proposed project would have the potential to discover previously unreported areas of contaminated soil from spills of PCBs and insulation oils on the existing substation property and pesticides or herbicide-contaminated soil from agricultural application in the expansion area. In the event of an unanticipated discovery of contaminated soils at the project site, the measures identified in APM HAZ-4 would be implemented, which would require the appropriate testing and proper disposal of the contaminated soil. However, not enough details are provided in this APM to determine its effectiveness. For example, APM HAZ-4 does not contain details about what equipment should be stored on site for use in case suspected contaminated soil is found. There are also no details regarding coordination with agencies if such soil is found. Impacts could therefore remain significant. In addition to the APM, MM HAZ-1 would require the applicant to prepare and implement a Hazardous Materials Management Plan to ensure that specific actions and protocols are established. MM HAZ-1 would supersede APM HAZ-4. Through implementation of MM HAZ-1, potential impacts associated with undiscovered soil contamination would be less than significant.

Operation and Maintenance

NO IMPACT

The proposed project would not be located within 0.25 miles of an open Cortese List site. Therefore, construction and operation of the proposed project would not result in any significant hazard to the public or environment due to affecting operations at Cortese List sites. Operation and maintenance of the

proposed project would not involve new ground disturbance; therefore, there would be no potential for uncovering contaminated soils. There would be no impact.

g. Would the project impair implementation of or physically interfere with an adopted emergency response plan or emergency evacuation plan?

NO IMPACT

Some activities, such as equipment delivery, could temporarily affect traffic on East Jensen Avenue and South McCall Avenues. However, Fresno County's emergency plan does not designate the roads in the project area (i.e., East Jensen Avenue and South McCall Avenues) as major transportation or emergency routes (Fresno County 2009). Therefore, there would be no impact to implementation of emergency response plans or emergency evacuation plans during construction or operation and maintenance of the proposed project.

h. Would the project expose people or structures to a significant risk of loss, injury, or death involving wildland fires, including where wildlands are adjacent to urbanized areas or where residences are intermixed with wildlands?

Construction

LESS THAN SIGNIFICANT IMPACT WITH MITIGATION

The proposed project area at and in the vicinity of the Sanger Substation is in an area of irrigated and cultivated agricultural fields and rural road corridors. The area is not adjacent to or near wildlands or urbanized areas. Equipment and vehicles used during construction, as well as welding activities required for construction of towers or support structures, have the potential to ignite dry vegetation and cause a fire. Smoking by site and construction workers is also a potential fire hazard. However, the project is not in a high fire hazard area, and there is not a significant amount of vegetation in the project area aside from irrigated crops, which would be removed from construction areas in the early stages of construction. Impacts from wildland fires would be less than significant for construction activities in the vicinity of the Sanger Substation.

The Fence Meadow Repeater Station is located in a Very High Fire Hazard Severity Zone in the Sierra National Forest, within a Federal Responsibility Area. Construction activities associated with installation of two dishes on an existing tower would increase fire risk during vehicle and equipment use, worker activities (such as cigarette smoking), and other activities that could produce a spark. However, the area around the station is for the most part cleared of vegetation, which reduces the risk of fire. Nonetheless, certain activities (e.g., starting a vehicle on a grassy area, workers smoking in a vegetated area) have the potential for igniting fire, which could result in a significant impact given the vegetation surrounding the Fence Meadow Repeater Station. No APMs were proposed to minimize or avoid impacts from wildland fires caused by the proposed project. MM HAZ-2 would require the applicant to prepare and implement a fire hazard reduction measures to minimize the risk of fire and to address impacts should a fire occur. Through implementation of MM HAZ-2, potential impacts associated with wildland fire would be less than significant.

MM HAZ-2: Fire Control Measures. PG&E shall implement the following measures prior to and during work at the Fence Meadow Repeater Station

1. As part of the Worker Training Program, workers will be trained in fire prevention and response practices to be implemented to minimize the risk of fire, and in the event of fire, trained to provide immediate response. At minimum, construction personnel shall be trained in fire

reporting and incipient-stage fire prevention, control, and extinguishing (i.e., the fire can be controlled or extinguished by portable fire extinguishers, small hose systems, or portable water supplies without the need for protective clothing or breathing apparatus.)

2. Prohibit smoking at the worksites other than in designated areas chosen that are free of ignitable material. Require disposal of cigarette butts in a way that will not ignite vegetation or other materials.
3. Ensuring an appropriate fire extinguisher is present before initiating and during each hot-work activity (e/g/, welding, brazing, soldering, grinding, and arc cutting).
4. Preventing vehicles with hot exhaust manifolds from idling on roads with combustible vegetation under the vehicles.
5. Do not park vehicles in areas with vegetation prone to ignition.
6. Equip all vehicles with a fire extinguisher.

Operation and Maintenance

NO IMPACT

Operation and maintenance of the proposed project would be similar to existing operation and maintenance of the Sanger Substation and nearby infrastructure. The project is not in a high fire hazard area, and there is not a significant amount of vegetation in the project area aside from irrigated crops. Operation and maintenance activities at the Fence Meadow Repeater Station would not increase or change as a result of installing two new dishes. Therefore, there would be no impact from wildland fires during operation and maintenance of the proposed project.

5.9 Hydrology and Water Quality

This section describes the environmental and regulatory setting and discusses impacts associated with the construction and operation of the Sanger Substation Expansion Project (proposed project) proposed by Pacific Gas and Electric Company (PG&E, or the applicant) with respect to hydrology and water quality.

As part of the proposed project, the applicant would mount two dishes, each measuring about 4 feet in diameter, on an existing tower at the Fence Meadow Repeater Station in the Sierra National Forest. The installations would have no impact on hydrology or water quality because they would be installed on existing structures and would not require any ground disturbance or any work in or adjacent to waterbodies. Therefore, the antenna system at the Fence Meadow Repeater Station is not discussed further in this section.

5.9.1 Environmental Setting

The project site is within the Kings River floodplain; however, based on Federal Emergency Management Act maps, the proposed project site is not in a 100-year or 500-year floodplain (FEMA 2015). Flood impacts are therefore not discussed in this section.

Groundwater

The project site is located within the San Joaquin Valley Groundwater Basin in the Kings Subbasin (USGS 2012; USGS and SWRCB 2012). The depth to groundwater in the vicinity of the proposed project ranges from 50 to 60 feet below ground surface with water level in the vicinity having dropped 18 feet in the last 10 years (Fresno Irrigation District 2014, 2015). There are several groundwater wells used for agricultural operations near the project site, as shown in Figure 5.9-1. Water for the project could be obtained from the city of Sanger, the city of Fowler, or a private landowner near the project site (PG&E 2015). Groundwater from the Kings Subbasin is the sole source of supplied municipal and industrial water to the city of Sanger (King Basin Water Authority 2012). Groundwater is also the sole water source for the City of Fowler (Weisser pers. comm. 2016). The city of Fowler is located in the Kings Subbasin.

Surface Water and Site Drainage

The project site is located in a level agricultural area approximately 5 miles west of the Kings River, which is the closest major river to the project area. There are no rivers or surface water on the substation site or along the power line alignments within the project area. The closest surface water feature is a bermed agricultural ditch approximately 80 feet north of the north boundary of the substation expansion area, as shown in Figure 5.9-1.

The project site elevation ranges from approximately 348 to 352 feet above mean sea level from Jensen Avenue in the south to the northern expanded project boundary, respectively (Google Earth, Inc. 2016).

Dam Inundation

The project site is located within the dam failure inundation area of Pine Flat Dam, as identified by the 2000 Background Report for the Fresno County General Plan (Fresno County 2000). The dam and reservoir are located approximately 19 miles northeast of the project site. Under a full reservoir total dam failure scenario, the inundation area that includes Sanger, Fresno, and Clovis would be covered by a 2-foot deep sheet flow of flood water (Fresno County 2000).

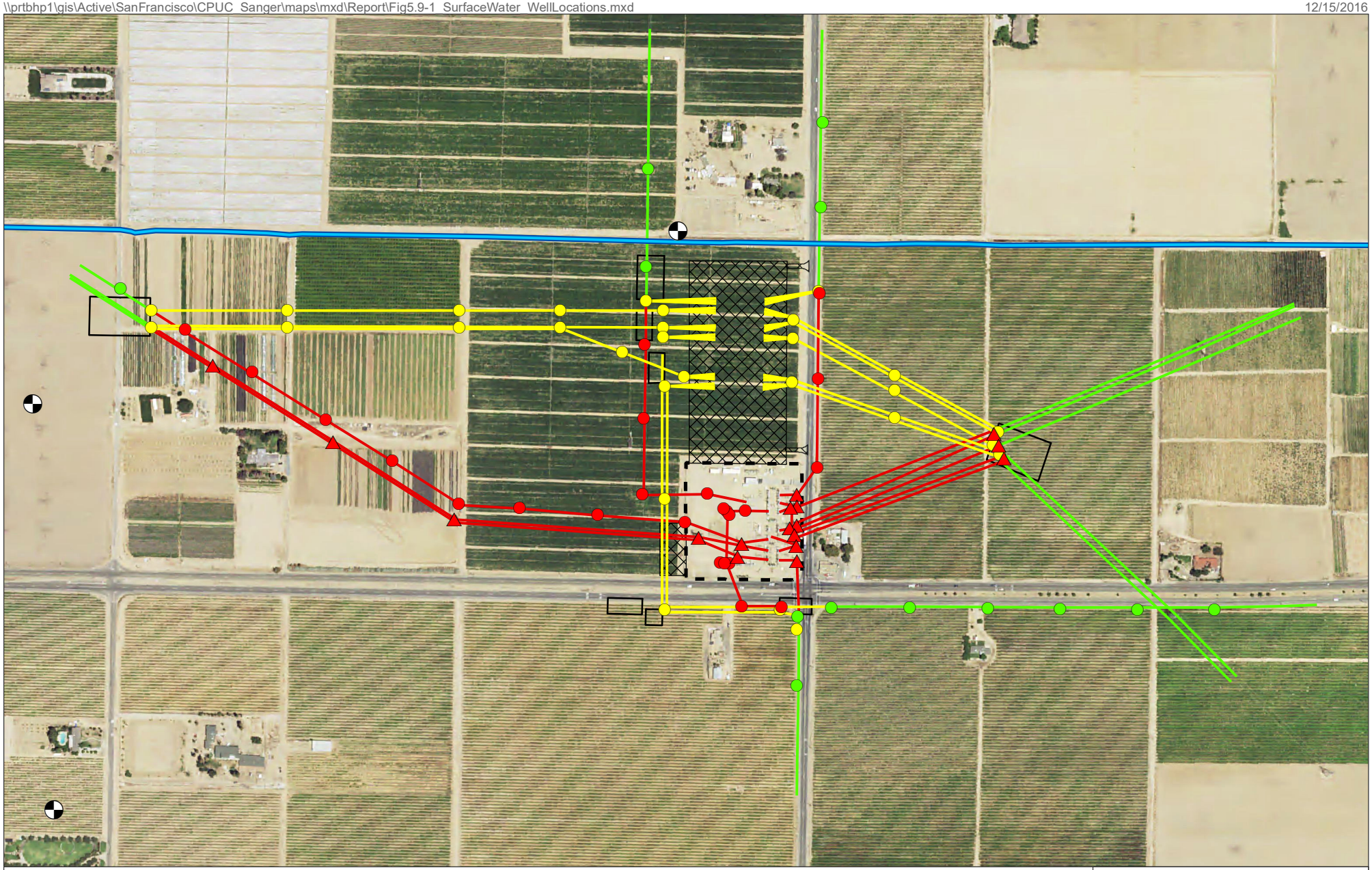

Figure 5.9-1
Surface Water Features and Water Well Locations
Sanger Substation
Fresno County, CA

5.9.2 Regulatory Setting

Federal

Clean Water Act Section 402 (National Pollution Discharge Elimination System)

As authorized by Section 402 of the Clean Water Act, the California State Water Resources Control Board (SWRCB) administers the statewide National Pollution Discharge Elimination System (NPDES) General Permit for Discharges of Stormwater Associated with Construction Activity (Construction General Permit) (NPDES Permit, 2009-0009-DWQ and 2010-0014-DWQ) that covers a variety of construction activities that could result in wastewater discharges. Under this system, the state grants coverage under the Construction General Permit for projects that disturb more than one acre of land. The SWRCB Construction General Permit process involves submittal of a Notice of Intent to the SWRCB to notify the agency of construction activity, development of a Stormwater Pollution Prevention Plan (SWPPP), and implementation of water quality monitoring activities if needed. The purpose of a SWPPP is to:

- Identify all pollutant sources that may affect the quality of discharges of storm water associated with construction activity from the construction site;
- Identify non-storm water discharges;
- Identify, construct, implement, and maintain best management practices (BMPs) to reduce or eliminate pollutants in storm water discharges and authorized non-storm water discharges from the construction site during construction;
- Develop a maintenance schedule for BMPs installed during construction that are designed to reduce or eliminate pollutants after construction is completed;
- Identify a sampling and analysis strategy and sampling schedule for discharges from construction activity that discharge directly to a waterbody listed for impairment due to sedimentation, in accordance with Clean Water Act Section 303(d); and
- Identify a sampling and analysis strategy and sampling schedule for discharges that are potentially contaminated by pollutants not visually detectable in the runoff.

The SWPPP would apply to all components of the proposed project that would result in ground disturbance.

State

Porter-Cologne Water Quality Control Act (Porter-Cologne Act)

Article 4 of the Porter-Cologne Water Quality Control Act (California Water Code 13260 et seq.) states that discharge of waste in an area that could affect Waters of the State requires filing a report of discharge with the Regional Water Quality Control Board. Waters of the State include surface water and groundwater in the state. Dischargers must obtain Waste Discharge Requirements.

Local

Fresno County General Plan

The *Fresno County General Plan* provides policy direction for land development in unincorporated Fresno County. The Open Space and Conservation Element of the plan includes the following goals and policies that are relevant to the proposed project:

- ***Goal OS-A:*** *To protect and enhance the water quality and quantity in Fresno County's streams, creeks, and groundwater basins.*
- ***Policy OS-A.23:*** *The County shall protect groundwater resources from contamination and overdraft by pursuing the following efforts:*
  - *Identifying and controlling sources of potential contamination;*
  - *Protecting important groundwater recharge areas;*
  - *Encouraging water conservation efforts and supporting the use of surface water for urban and agricultural uses wherever feasible;*
  - *Encouraging the use of treated wastewater for groundwater recharge and other purposes (e.g., irrigation, landscaping, commercial, and nondomestic uses);*
  - *Supporting consumptive use where it can be demonstrated that this use does not exceed safe yield and is appropriately balanced with surface water supply to the same area;*
  - *Considering areas where recharge potential is determined to be high for designation as open space; and*
  - *Developing conjunctive use of surface and groundwater.*
- ***Policy OS-A.25:*** *The County shall minimize sedimentation and erosion through control of grading, cutting of trees, removal of vegetation, placement of roads and bridges, and use of off-road vehicles. The County shall discourage grading activities during the rainy season unless adequately mitigated to avoid sedimentation of creeks and damage to riparian habitat.*

5.9.3 Environmental Impacts and Assessment

Applicant Proposed Measures

The applicant has incorporated the following Applicant Proposed Measure (APM) into the project to specifically minimize or avoid impacts on hydrology and water quality. A list of all project APMs is included in Table 4-5.

APM GEO-2/APM WQ-1: Development and implementation of a Storm Water Pollution Prevention Plan (SWPPP). Because the project involves more than an acre of soil disturbance, a SWPPP will be prepared for the project as required by the state National Pollutant Discharge Elimination System (NPDES) General Permit for Discharges of Stormwater Associated with Construction Activity. This plan will be prepared in accordance with the Water Board guidelines and other applicable erosion and sediment control Best Management Practices (BMPs). Implementation of the plan will help stabilize disturbed areas and will reduce erosion and sedimentation. The SWPPP will designate BMPs that will be followed during and after construction of the project. Examples of erosion-minimizing measures that may be identified in the SWPPP include:

- Using drainage control structures (e.g., straw wattles or silt fencing) to direct surface runoff away from disturbed areas.

- Strictly controlling vehicular traffic.
- Implementing a dust-control program during construction.
- Restricting access to sensitive areas.
- Using vehicle mats in wet areas.
- Revegetating disturbed areas, where applicable, following construction.

In areas where soils are to be temporarily stockpiled, soils will be placed in a controlled area and will be managed with similar erosion control techniques. Where construction activities occur near a surface waterbody or drainage channel and drainage from these areas flows towards a waterbody or wetland, stockpiles will be placed at least 100 feet from the waterbody or will be properly contained (such as berming or covering to minimize risk of sediment transport to the drainage). Mulching or other suitable stabilization measures will be used to protect exposed areas during and after construction activities. Erosion-control measures will be installed, as necessary, before any clearing during the wet season and before the onset of winter rains. Temporary measures, such as silt fences or wattles intended to minimize erosion from temporarily disturbed areas, will remain in place until disturbed areas have stabilized.

The SWPPP will be designed specifically for the hydrologic setting of the project.

Impacts on Hydrology and Water Quality

Table 5.9-1 includes the significance criteria from Appendix G of the California Environmental Quality Act Guidelines' hydrology and water quality section to evaluate the environmental impacts of the proposed project. The proposed project would not be located in a 100-year floodplain. There would be no impact under criteria (g) and (h), and detailed analyses are, therefore, not provided in this section.

Table 5.9-1 Hydrology and Water Quality Checklist

Would the project:	Potentially Significant Impact	Less Than Significant with Mitigation Incorporation	Less Than Significant Impact	No Impact
a. Violate any water quality standards or waste discharge requirements?	☐	☐	☐	☒
b. Substantially deplete groundwater supplies or interfere substantially with groundwater recharge such that there would be a net deficit in aquifer volume or a lowering of the local groundwater table level (e.g., the production rate of pre-existing nearby wells would drop to a level which would not support existing land uses or planned uses for which permits have been granted)?	☐	☐	☒	☐
c. Substantially alter the existing drainage pattern of the site or area, including through the alteration of the course of a stream or river, in a manner, which would result in substantial erosion or siltation on- or off-site?	☐	☐	☒	☐
d. Substantially alter the existing drainage pattern of the site or area, including through the alteration of the course of a stream or river, or substantially increase the rate or amount of surface runoff in a manner which would result in flooding on- or off-site?	☐	☐	☒	☐

Table 5.9-1 Hydrology and Water Quality Checklist

Would the project:	Potentially Significant Impact	Less Than Significant with Mitigation Incorporation	Less Than Significant Impact	No Impact
e. Create or contribute runoff water which would exceed the capacity of existing or planned storm water drainage systems or provide substantial additional sources of polluted runoff?	☐	☒	☐	☐
f. Otherwise substantially degrade water quality?	☐	☐	☐	☒
g. Place housing within a 100-year flood hazard area as mapped on a federal Flood Hazard Boundary or Flood Insurance Rate Map or other flood hazard delineation map?	☐	☐	☐	☒
h. Place within a 100-year flood hazard area structures which would impede or redirect flood flows?	☐	☐	☐	☒
i. Expose people or structures to a significant risk of loss, injury or death involving flooding, including flooding as a result of the failure of a levee or dam?	☐	☐	☒	☐
j. Expose people or structures to a significant risk of inundation by seiche, tsunami, or mudflow?	☐	☐	☐	☒

a. Would the project violate any water quality standards or waste discharge requirements?

Construction

NO IMPACT

The closest surface waterbody to the project site is an agricultural irrigation ditch approximately 80 feet north of the project site. No activities would involve filling this irrigation ditch or otherwise discharging materials into this irrigation ditch. Furthermore, the ditch is bermed. Given the distance of the ditch from the construction area and the presence of a berm, it is improbable that any hazardous materials spill or runoff would reach the irrigation ditch and affect water quality. PG&E would water the unpaved road adjacent to the irrigation ditch during construction for dust abatement pursuant to APM AIR-1, presented in Section 5.3.3. The road is below the grade of the berm and this water would not enter the irrigation ditch. There would be no excavation or drilling that could affect groundwater, given that groundwater is 50 to 60 feet below ground surface, which is deeper than any excavation required for the project. There would be no impact related to water quality standards or waste discharge requirements.

Operation and Maintenance

NO IMPACT

Operation and maintenance of the expanded substation would involve activities similar to the existing operation and maintenance activities. There would be no change to the risk impacts related to water quality and waste discharge requirements. There would be no impact.

b. Would the project substantially deplete groundwater supplies or interfere substantially with groundwater recharge such that there would be a net deficit in aquifer volume or a lowering of the local groundwater table level (e.g., the production rate of pre-existing nearby wells would drop to a

level which would not support existing land uses or planned uses for which permits have been granted)?

Construction

LESS THAN SIGNIFICANT IMPACT

Water supply for construction would be obtained from the City of Sanger and/or the City of Fowler and/or the substation expansion area landowner, all of which use groundwater. The estimated total water needs of the project construction are 1 million gallons for dust control, compaction, and concrete work. The substation expansion area currently supports row crops that are irrigated during the growing season, requiring 5.9 million gallons of groundwater per year. Overall, a reduction in groundwater use is anticipated at the site since crops would no longer be grown during construction within the proposed substation expansion site, and irrigation for this purpose would cease. Assuming all 1 million gallons of water are used during one year, there would be a net reduction in groundwater use of about 4.9 million gallons in that year of construction. Construction would use less groundwater than is currently used on the parcel for agricultural operations. Therefore, there would be a net reduction in groundwater use on the parcel during construction. There would be no adverse impact to groundwater levels or supplies during construction of the proposed project.

The proposed project would create approximately 6.8 acres of 95-percent compacted yard surface rock at the substation site during construction. This type of surface is considered impervious or less pervious. The power line reconfiguration work would add minimal interstitial impervious surface from foundation installation. The impervious surface at the substation site is associated with the expansion area, retention pond, and foundations. Storm water would accumulate in the on-site retention basin that would be constructed as part of the proposed project during precipitation events. The captured rain water runoff from the substation that is collected in the retention basin would eventually percolate into the ground. The small amount of new impervious surface compared to the size of the ground surface that recharges the groundwater basin, abundant pervious surface surrounding the project site, and percolation from the retention basin means that groundwater recharge would not be measurably impacted. Impacts to recharge would be less than significant.

Operation and Maintenance

NO IMPACT

Operation and maintenance of the expanded substation would not require water. Furthermore, the current water demands for the irrigation of eggplant crops that are planted in the proposed substation expansion area would cease because the crops would be removed as part of construction of the proposed project, resulting in a net reduction of 5.9 million gallons of groundwater use per year. No additional impervious surface would be created during operation and maintenance of the proposed project. There would be no adverse impact to groundwater during operation and maintenance of the proposed project.

c. Would the project substantially alter the existing drainage pattern of the site or area, including through the alteration of the course of a stream or river, in a manner which would result in substantial erosion or siltation on- or off-site?

Construction

LESS THAN SIGNIFICANT IMPACT

Ground disturbance would occur during construction at the substation expansion site, access roads, and power line reconfiguration. Grading would be minimal and would not affect active drainages. The

substation site, where most grading would occur, is nearly level; therefore, grading would not substantially affect the grade of the site. The substation expansion site would be graded to divert all storm water to a new retention basin in the southwestern portion of the expansion area. The substation site would also be covered with crushed rock. These components would prevent substantial erosion and siltation once these elements are in place. However, during active grading and construction activities for trenching and substation site grading, which could require up to 3 feet of overexcavation, there could be significant erosion impacts. The applicant would be required to develop and implement a SWPPP that would address erosion control per APM GEO-2/APM WQ-1. Implementation of the BMPs in the SWPPP as detailed in APM GEO-2/APM WQ-1, such as using straw wattles and stockpiling soils in a controlled area, would minimize the potential for erosion and siltation on site. Impacts from construction would be less than significant with the implementation of APM GEO-2/APM WQ-1.

Operation and Maintenance

NO IMPACT

No additional changes to drainages would be created during operation and maintenance of the proposed project. There would be no adverse impact related to drainages and sedimentation and siltation during operation and maintenance of the proposed project.

d. Would the project substantially alter the existing drainage pattern of the site or area, including through the alteration of the course of a stream or river, or substantially increase the rate or amount of surface runoff in a manner which would result in flooding on- or off-site?

Construction

LESS THAN SIGNIFICANT IMPACT

Ground disturbance would occur during construction at the substation expansion site, access roads, and in the power line reconfiguration area. The grading would be minimal and would not affect active drainages. The substation expansion site, where most grading would occur, is nearly level; therefore, grading would not substantially affect the grade of the site. The substation expansion site would be mostly covered with crushed rock, which would decrease permeability of the site and could increase runoff from the expansion area. The substation expansion site would be graded to divert all storm water to a new retention basin in the southwestern portion of the expansion area. The storm water retention basin would provide approximately 40,000 cubic feet of storage for the proposed facility. The site drainage system and retention basin would be designed to collect and allow infiltration of the volume of runoff generated by impervious (10 percent), semi-pervious (70 percent), and pervious (20 percent) surfaces of the facility during a 50-year storm event. Grading associated with power line reconfiguration would be limited in area such that it may result in some localized ponding, but these impacts would be minor and temporary. Impacts would be less than significant.

Operation and Maintenance

NO IMPACT

No additional changes to drainages would be created during operation and maintenance of the proposed project. There would be no adverse impact related to drainages and flooding during operation and maintenance of the proposed project.

e. Would the project create or contribute runoff water which would exceed the capacity of existing or planned storm water drainage systems or provide substantial additional sources of polluted runoff?

Construction

LESS THAN SIGNIFICANT IMPACT WITH MITIGATION

The project site is not served by any existing or planned public or private storm water drainage systems other than the drainage system at the existing Sanger Substation. Ground disturbance during construction activities at the substation expansion site, access roads, and power line reconfiguration work areas would mobilize sediment and could result in polluted runoff. Discovery of contaminated soils may also result in polluted runoff. Construction activities also carry the risk of a hazardous materials spill, which could contribute to polluted runoff. Once constructed, the site drainage system and retention basin for the expanded substation would collect and retain the volume of runoff generated by the facility during a 50-year storm event. However, until the retention basin is constructed, the potential for creation of polluted runoff would be significant. APM HAZ-2 would require that construction crews are trained in safe handling of hazardous materials prior to the initiation of construction activities. APM HAZ-4 would require suspected contaminated soils to be tested. These APMs are fully described in Section 5.8.3. GEO-2/APM WQ-1 would require implementation of a SWPPP to minimize sedimentation through implementation of BMPs.

Implementation of the SWPPP APM would reduce sedimentation impacts to less than significant. Implementation of the hazardous materials APMs mentioned above could prevent some hazardous materials impacts from occurring during routine construction. However, not enough details are provided in APM HAZ-2 and APM HAZ-4 to determine their effectiveness in preventing hazardous materials impacts. For example, APM HAZ-2 requires spill response equipment and training but does not require immediate and thorough cleanup of spills and does not require storage of equipment to contain runoff from contaminated areas from accidental spills. And APM HAZ-4 requires testing of removed soil suspected of contamination, but does not contain specific details on equipment to keep on site to allow for removal of such soil as well as coordination procedures to follow if contaminated soil is located. Hazardous materials pollution impacts could remain significant. MM HAZ-1 would require the applicant to prepare and implement a Hazardous Materials Management Plan to ensure that specific actions and protocols are established. MM HAZ-1 is fully described in Section 5.8.3 and would supersede APM HAZ-2 and APM HAZ-4. Through implementation of MM HAZ-1, in addition to APM GEO-2/APM WQ-1, potential impacts associated with polluted runoff due to hazardous materials would be less than significant.

Operation and Maintenance

LESS THAN SIGNIFICANT IMPACT

Operation and maintenance activities for the proposed project would be comparable to the activities currently occurring at the project site. No new ground disturbance is planned, such that no new sources of sedimentation would be created during operation and maintenance. The new configuration of the substation, including the retention basin, would result in an outdated Spill Prevention, Control, and Countermeasure plan for Sanger Substation, which could result in polluted runoff if there is a hazardous materials spill and thus a significant impact. As described in Section 5.8.3, under APM HAZ-1 the applicant would prepare a new Spill Prevention, Control, and Countermeasure plan for Sanger Substation to address the new substation design and retention basin. Impacts would be less than significant with the implementation of APM HAZ-1.

f. Would the project otherwise substantially degrade water quality?

NO IMPACT

All potential impacts to water quality are addressed under other significance criteria. The proposed project's construction and operation would not otherwise substantially degrade water quality. There would be no other water quality impact.

i. Would the project expose people or structures to a significant risk of loss, injury or death involving flooding, including flooding as a result of the failure of a levee or dam?

LESS THAN SIGNIFICANT IMPACT

The project site is located within a potential dam failure inundation area associated with Pine Flat Dam. The project area could be temporarily flooded by the initial water surge following a catastrophic failure of Pine Flat Dam. Flood waters would be only up to 2 feet deep at the project site. Dam failure risk at the project site would not change after the project is built. Currently, the project site contains a substation with certain risks from dam failure. The proposed project would result in an expanded substation at the same site, with similar risks, given that operation and maintenance activities would be appreciably the same as current activities. Therefore, the proposed project would not exacerbate the risk of dam failure, and construction and operation of the project would result in a less than significant impact.

j. Would the project expose people or structures to a significant risk of inundation by seiche, tsunami, or mudflow?

NO IMPACT

Even though the project is located within a seismically active region, no waterbodies are located in the vicinity of the project that are capable of generating seiches or tsunamis that could result in inundation at the project site. Mudflows require super-saturated slope conditions. The topography at and adjacent to the project site is generally level. Slopes capable of generating mudflows are not present and would not be created by project implementation. There would be no impact.

5.10 Land Use and Planning

This section describes the environmental and regulatory setting and discusses impacts associated with the construction and operation of the Sanger Substation Expansion Project (proposed project) proposed by Pacific Gas and Electric Company (PG&E, or the applicant) with respect to land use and planning. The proposed project would not be located in an established community; therefore, impacts relating to division of an established community are not discussed.

As part of the proposed project, the applicant would mount two dishes, each measuring about 4 feet in diameter, on an existing tower at the Fence Meadow Repeater Station in the Sierra National Forest. The installation would not change the current land uses at the existing repeater station and therefore would not conflict with applicable land use plans, policies, or regulations. Additionally, PG&E leases this land from the U.S. Forest Service; per PG&E's Communication Use Lease, this site is to only be used for the construction, operation, maintenance, and termination of a microwave industrial communications facility. The Communications Use Lease for the site and the decision memo from the U.S. Forest Service do not place a limit on the number of microwave dishes at the site. Likewise, it would not divide an established community or conflict with a Habitat Conservation Plan or Natural Community Conservation Plan. Therefore, the antenna system is not discussed further in this section

5.10.1 Environmental Setting

The proposed project site is located in the central portion of Fresno County, 2 miles west of the City of Sanger and 3.5 miles southeast of the City of Fresno. The area is dominated by commercial agricultural uses, including wineries, row crops, and fruit processing plants, which thrive near the junction of several important regional transportation corridors, including State Route 180 and State Route 99 (Figure 4-1). Land use in the project area is predominantly agriculture and existing utility infrastructure. The proposed project would be located on agricultural land currently used to grow row crops. Existing land uses along the proposed reconfigured power line routes are primarily agricultural (i.e., row crops and vineyards). Sanger Substation is also located adjacent to East Jensen Avenue and South McCall Avenue (Figure 4-3).

5.10.2 Regulatory Setting

Federal

Pacific Gas and Electric Company San Joaquin Valley Operations and Maintenance Habitat Conservation Plan

Section 10 of the federal Endangered Species Act allows for issuance of incidental take permits for endangered species to private parties as long as a Habitat Conservation Plan (HCP) is developed and approved. The PG&E San Joaquin Valley Operations and Maintenance HCP, implemented in early 2008, covers routine operation and maintenance activities for PG&E utility systems within nine counties of the San Joaquin Valley, including Fresno County. The HCP establishes clear goals and measures for protecting, managing, and monitoring 23 wildlife and 42 plant species in the San Joaquin Valley area. These species include the San Joaquin kit fox, California red-legged frog, vernal pool fairy shrimp, and western burrowing owl (Jones & Stokes 2006). The proposed project area is within the boundaries of the HCP.

State

California Land Conservation Act of 1965

The California Land Conservation Act of 1965, commonly referred to as the "Williamson Act," enables local governments to enter into ongoing, minimum 10-year contracts with private landowners for the purpose of restricting specific parcels of land to agricultural or compatible uses. In return, restricted parcels are assessed for property tax purposes at a rate consistent with their actual uses, farming uses, and open space uses, as opposed to potential market value.

Government code section 51238.1(a) describes that uses on the land must be consistent with specific compatibility criteria:

1. *The use will not significantly compromise the long-term productive agricultural capability of the subject contracted parcel or parcels or on other contracted lands in agricultural preserves.*
2. *The use will not significantly displace or impair current or reasonably foreseeable agricultural operations on the subject contracted parcel or parcels or on other contracted lands in agricultural preserves. Uses that significantly displace agricultural operations on the subject contracted parcel or parcels may be deemed compatible if they relate directly to the production of commercial agricultural products on the subject contracted parcel or parcels or neighboring lands, including activities such as harvesting, processing, or shipping.*
3. *The use will not result in the significant removal of adjacent contracted land from agricultural or open-space use. In evaluating compatibility a board or council shall consider the impacts on noncontracted lands in the agricultural preserve or preserves.*

Local

The CPUC's General Order 131-D, section XIV.B, states that "Local jurisdictions acting pursuant to local authority are preempted from regulating electric power line projects, distribution lines, substations, or electric facilities constructed by public utilities subject to the Commission's jurisdiction. However, in locating such projects, the public utilities shall consult with local agencies regarding land use matters." The CPUC expects PG&E to work collaboratively to address local agencies' concerns. PG&E would need to obtain all ministerial building and encroachment permits from Fresno County. PG&E is not required to obtain local discretionary permits because the CPUC's jurisdiction over PG&E preempts local jurisdiction. Article XII, Section 8 of the California Constitution states that "[a] city, county, or other public body may not regulate matters over which the Legislature grants regulatory power to the [CPUC]. Thus, under the constitution, as to matters over which the [C]PUC has been granted regulatory power, the [C]PUC's jurisdiction is exclusive."[1]

Fresno County General Plan

The Fresno County General Plan provides policy direction for land development in unincorporated Fresno County. The following policies from the Fresno County General Plan are relevant to the proposed project:

- ***Policy LU-A.1*****:** *The County shall maintain agriculturally-designated areas for agriculture use and shall direct urban growth away from valuable agricultural lands to cities, unincorporated communities, and other areas planned for such development where public facilities and infrastructure are available*

[1] *Southern California Gas Co. v. City of Vernon*, 41 Cal App. 4th 209, 215 (1995) (internal quotation marks omitted).

- ***Policy PF-C.3:*** *To reduce demand on the county's groundwater resources, the County shall encourage the use of surface water to the maximum extent feasible.*
- ***Policy PF-E.16/Policy OS-A.25:*** *The County shall minimize sedimentation and erosion through control of grading, cutting of trees, removal of vegetation, placement of roads and bridges, and use of off-road vehicles. The County shall discourage grading activities during the rainy season, unless adequately mitigated, to avoid sedimentation of creeks and damage to riparian habitat.*
- ***Policy PF-J.1:*** *Encourage the provision of adequate gas and electric, communications, and telecommunications service and facilities to serve existing and future needs.*
- ***Policy PF-J.2:*** *Work with local gas and electric utility companies to design and locate appropriate expansion of gas and electric systems, while minimizing impacts to agriculture and minimizing noise, electromagnetic, visual, and other impacts on existing and future residents.*
- ***Policy HS-G.1:*** *Require that all proposed development incorporate design elements necessary to minimize adverse noise impacts on surrounding land uses.*
- ***Policy HS-G.6:*** *Regulate construction-related noise to reduce impacts on adjacent uses in accordance with the County's Noise Control Ordinance.*
- ***Policy OS-E.2:*** *The County shall require adequate buffer zones between construction activities and significant wildlife resources, including both onsite habitats that are purposely avoided and significant habitats that are adjacent to the project site, in order to avoid the degradation and disruption of critical life cycle activities such as breeding and feeding. The width of the buffer zone should vary depending on the location, species, etc. A final determination shall be made based on informal consultation with the U.S. Fish and Wildlife Service and/or the California Department of Fish and [Wildlife].*

The entire project area—including the substation expansion area, power line reconfiguration area, telecommunication line routes, access roads, and laydown areas—is located on land classified as Agriculture in the Fresno County General Plan. This designation provides for the production of crops and livestock, as well as the location of necessary agriculture commercial centers, agricultural processing facilities, and certain nonagricultural activities such as electrical substations subject to criteria listed in General Plan Policy LU-A.3. Criteria include preclusion of siting on productive agricultural land if there is less productive land nearby and requiring that the use provide a needed service to the surrounding agricultural area that cannot be provided more efficiently in an urban area or that has to be located in a non-urban area due to unusual operational characteristics (Fresno County 2000).

Fresno County Zoning Ordinance

The zoning designation for the entire project area is Exclusive Agricultural (AE) District, 20-acre minimum lot size (AE-20) lands. Per Fresno County Ordinance Code § 816, the AE District is intended to protect the general welfare of the agricultural community from encroachments of nonrelated agricultural uses that would be injurious to the physical and economic well-being of the agricultural district. Pursuant to Section 816.2-D, electrical transmission and distribution substations are permitted uses within the AE District, subject to approval of a conditional use permit by the Fresno County Director of Public Works and Planning. As previously discussed, the proposed project would not be subject to local discretionary regulations due to the CPUC's exclusive jurisdiction over electric transmission facilities in the State of California, pursuant to CPUC General Order No. 131-D (CPUC 1995).

5.10.3 Environmental Impacts and Assessment

Applicant Proposed Measures

The applicant has not incorporated applicant proposed measures (APMs) into the proposed project to specifically minimize or avoid impacts on land use. A list of all project APMs is included in Table 4-5.

Impacts on Land Use

Table 5.10-1 includes the significance criteria from Appendix G of the California Environmental Quality Act Guidelines' land use section to evaluate the environmental impacts of the proposed project. The proposed project would not be located in an established community; therefore, impacts relating to division of an established community under criterion (a) are not discussed.

Table 5.10-1 Land Use and Planning Checklist

Would the project:	Potentially Significant Impact	Less Than Significant with Mitigation Incorporation	Less Than Significant Impact	No Impact
a. Physically divide an established community?	☐	☐	☐	☒
b. Conflict with any applicable land use plans, policy, or regulation of an agency with jurisdiction over the project (including, but not limited to the general plan, specific plan, local coastal program, or zoning ordinance) adopted for the purpose of avoiding or mitigating an environmental effect?	☐	☐	☐	☒
c. Conflict with any applicable habitat conservation plan or natural community conservation plan?	☐	☐	☐	☒

b. Would the project conflict with any applicable land use plan, policy, or regulation of an agency with jurisdiction over the project (including, but not limited to the general plan, specific plan, local coastal program, or zoning ordinance) adopted for the purpose of avoiding or mitigating an environmental effect?

NO IMPACT

As explained above, the CPUC has preemptive jurisdiction over the siting and design of the proposed project. Thus, although the proposed project would be located in Fresno County, the County does not have land use jurisdiction over the project and none of the County's land use plans, policies, or regulations apply to the proposed project. Therefore, the proposed project would not conflict with any applicable land use plans, policy, or regulation of an agency with jurisdiction over the project.

Nevertheless, this analysis describes and addresses the project's consistency with land use plans, policies, and regulations that pertain to the proposed project areas to determine if inconsistency would result in an environmental impact. As explained in Table 5.10-2, the proposed project may be inconsistent with a number of Fresno County General Plan policies, goals, objectives, and ordinances. However, in all of these instances, the inconsistency either would not result in a physical impact on the environment, or the potential physical impact associated with the inconsistency is already analyzed and addressed in this MND in the specific resource area analysis. Table 5.10-2 does not address General Plan Policy LU-A.3, which lists criteria for approving a use such as an electrical substation in agricultural areas, because the proposed project does not involve a new use, as it consists of expansion of an existing electrical

substation facility. Furthermore, the CPUC ultimately has preemptive jurisdiction over the criteria listed under General Plan Policy LU-A.3 and would not need a discretionary permit from the County for the proposed project.

Table 5.10-2 Sanger Substation Expansion Project Conformity with Plans, Policies, and Regulations Related to Land Use and Planning

Plan, Policy, or Regulation	Consistency Analysis
Fresno County General Plan Policy LU-A.1: The County shall maintain agriculturally-designated areas for agriculture use and shall direct urban growth away from valuable agricultural lands to cities, unincorporated communities, and other areas planned for such development where public facilities and infrastructure are available	Land use in the proposed project area is predominantly agriculture and existing utility infrastructure. The proposed project area would be located on agricultural land currently used to grow row crops. Existing land uses along the proposed reconfigured power line routes include primarily agricultural uses (i.e., row crops and vineyards). The proposed project would result in conversion of agricultural land to non-agricultural use (see Section 5.2, "Agriculture and Forest Resources"). The proposed project would involve expansion of an existing substation such that it utilizes existing infrastructure. However, the proposed project would result in a net loss of 7.2 acres of land to non-agricultural use, which would likely be inconsistent with Policy LU-A.1. This conflict itself would not, however, result in a physical environmental impact. For a complete analysis of agricultural land conversion impacts, refer to Section 5.2, "Agriculture and Forest Resources."
Fresno County General Plan Policy PF-C.3: To reduce demand on the county's groundwater resources, the County shall encourage the use of surface water to the maximum extent feasible.	The proposed project would utilize groundwater during construction for dust suppression. However, use during construction would be less than the current amount used to irrigate the substation expansion area. Therefore, construction and operation of the proposed project would reduce demand on groundwater resources. There would be no conflict with Policy PF-C.3
Fresno County General Plan Policy PF-E.16/Policy OS-A.25: The County shall minimize sedimentation and erosion through control of grading, cutting of trees, removal of vegetation, placement of roads and bridges, and use of off-road vehicles. The County shall discourage grading activities during the rainy season, unless adequately mitigated, to avoid sedimentation of creeks and damage to riparian habitat.	Ground disturbance during construction of the proposed project could cause erosion and sedimentation, particularly during the rainy season. This would likely be inconsistent with the policy of minimizing these environmental effects. The conflict itself would not, however, result in a physical environmental impact. For a complete analysis of sedimentation and erosion impacts, refer to Section 5.6, "Geology and Soils," and Section 5.9, "Hydrology and Water Quality."
Fresno County General Plan Policy PF-J.1: Encourage the provision of adequate gas and electric, communications, and telecommunications service and facilities to serve existing and future needs	The proposed project would improve the electric reliability to the surrounding agricultural area and is designed to accommodate potential future widening of South McCall Avenue. The proposed project would not conflict with Policy PF-J.1.
Fresno County General Plan Policy PF-J.2: Work with local gas and electric utility companies to design and locate appropriate expansion of gas and electric systems, while minimizing impacts to agriculture and minimizing noise, electromagnetic, visual, and other impacts on existing and future residents.	The proposed project would have impacts on agriculture, noise, aesthetics, and other environmental resource areas as discussed in Chapter 5. This Initial Study outlines mitigation measures and APMs that would reduce any significant impacts. The proposed project therefore would not conflict with Policy PF-J.2.

Table 5.10-2 Sanger Substation Expansion Project Conformity with Plans, Policies, and Regulations Related to Land Use and Planning

Plan, Policy, or Regulation	Consistency Analysis
Fresno County General Plan Policy HS-G.1: Require that all proposed development incorporate design elements necessary to minimize adverse noise impacts on surrounding land uses.	Construction of the proposed project would result in increased noise levels for certain nearby sensitive receptors, as described in Chapter 5.12, "Noise," which would likely be inconsistent with Policy HS-G.1 PG&E has committed to implementation of APMs that would minimize noise impacts, as described in Section 5.12. There would be no conflict during construction of the proposed project. As described in Chapter 5.12, "Noise," operation and maintenance of the proposed project would not be different than current operations. There would be no noise impact and therefore no conflict during operation and maintenance. For a complete analysis of noise impacts, refer to Section 5.12, "Noise."
Fresno County General Plan Policy HS-G.6: Regulate construction-related noise to reduce impacts on adjacent uses in accordance with the County's Noise Control Ordinance.	Construction that would occur outside of allowed hours in the Fresno County Noise Control Ordinance would likely be inconsistent with this policy. As described in Chapter 5.12, "Noise," PG&E would implement an APM to comply with the ordinance, except when night work is needed. Night work would not generate very loud noise since it would involve work such as testing. There would be no conflict with Policy HS-G.6 to reduce construction noise impacts on adjacent land uses. For a complete analysis of noise impacts, refer to Section 5.12, "Noise."
Fresno County Zoning Ordinance Code §816.2-D	The proposed project area is zoned as AE-20, which provides for exclusive agricultural use on a minimum of 20 acres, per Fresno County Ordinance Code § 816.2. Although the AE zoning designation is intended to protect the general welfare of the agricultural community from encroachments of non-related agricultural uses, Section 816.2-D of the Fresno County Ordinance Code states that electrical transmission substations and electric distribution substations are permitted as a conditional use in the AE zone. Such use is permitted if certain requirements are met and with the issuance of a conditional use permit. Additionally, the substation expansion area would occupy only 7 acres of the adjacent 112.5-acre parcel, leaving the 105.5-acre balance of the parcel available for continued agricultural use, and no changes in the land use designation or zoning of the property would be required. There would be no conflict.
Fresno County General Plan Policy OS-E.2: The County shall require adequate buffer zones between construction activities and significant wildlife resources, including both onsite habitats that are purposely avoided and significant habitats that are adjacent to the project site, in order to avoid the degradation and disruption of critical life cycle activities such as breeding and feeding. The width of the buffer zone should vary depending on the location, species, etc. A final determination shall be made based on informal consultation with the U.S. Fish and Wildlife Service and/or the California Department of Fish and [Wildlife].	Nesting birds have been sighted at the existing substation and in the proposed project area. There is also habitat for San Joaquin kit fox. Construction work could occur close enough to these species to disrupt breeding and feeding, which would likely be inconsistent with Policy OS-E.2. MM BIO-2, MM BIO-3, MM BIO-4, MM BIO-5, MM BIO-6, and MM BIO-7 outline buffer requirements for avoiding construction impacts to these species. There would be no conflict after implementation of mitigation. For a complete analysis of impacts to biological resources, refer to Section 5.4, "Biological Resources."

1

c. Would the project conflict with any applicable habitat conservation plan or natural community conservation plan?

NO IMPACT

Refer to Section 5.4, "Biological Resources," for further discussion of proposed project compliance with the PG&E San Joaquin Valley Operations and Maintenance HCP. There would be no conflict with the HCP, and therefore there would be no impact.

This page intentionally left blank.

5.11 Mineral Resources

This section describes the environmental and regulatory setting and discusses impacts associated with the construction and operation of the Sanger Substation Expansion Project (proposed project) proposed by Pacific Gas and Electric Company (PG&E, or the applicant) with respect to mineral resources.

As part of the proposed project, the applicant would mount two dishes, each measuring about 4 feet in diameter, on an existing tower at the Fence Meadow Repeater Station in the Sierra National Forest. The installations would have no impact on mineral resources because they would be installed on existing structures and would not require any ground disturbance. Therefore, the antenna system at the Fence Meadow Repeater Station is not discussed further in this section.

5.11.1 Environmental Setting

Extracted resources in Fresno County include aggregate products (i.e., sand and gravel), oil and coal, metals (i.e., chromite, copper, gold, mercury, and tungsten), and other minerals (i.e., asbestos, high-grade clay, diatomite, granite, gypsum, and limestone). Aggregate and petroleum are considered the county's most significant extractive mineral resources (Fresno County 2000a). There are no active oil wells or gravel mines within the project area. The Fresno County General Plan does not identify any known mineral resources on or adjacent to the proposed project site (Fresno County 2000a).

Under the California State Surface Mining and Reclamation Act of 1975, Mineral Resource Zones (MRZs) are defined by the State Geologist and used to classify areas by level of significance as a mineral resource. The following MRZ categories are used to classify land:

- MRZ-1: Areas where adequate information indicates that no significant mineral deposits are present, or where it is judged that little likelihood exists for their presence.
- MRZ-2: Areas where adequate information indicates that significant mineral deposits are present, or where it is judged that a high likelihood exists for their presence.
- MRZ-3: Areas containing mineral deposits, the significance of which cannot be evaluated from available data.
- MRZ-4: Areas where available information is inadequate for assignment to any other MRZ.

The proposed project area is designated as MRZ-3 (Young 1998).

5.11.2 Regulatory Setting

Federal and State

There are no relevant federal or state regulations related to mineral resources.

Local

Fresno County General Plan

The Fresno County General Plan was created to meet state general plan requirement and "is a comprehensive, long-term framework for the protection of the county's agriculture, natural, and cultural resources and for development of the county" (Fresno County 2000b). The Open Space and Conservation Element includes goals and policies to guide the management of the production of commodity resources. Section C focuses on mineral resources and states:

- ***Policy OS-C.2:*** *The County shall not permit land uses incompatible with mineral resources recovery within areas designated as Mineral Resources Zone 2 (MRZ-2).*
- ***Policy OS-C.10:*** *The County shall not permit land uses that threaten the future availability of mineral resource or preclude future extraction of those resources.*

5.11.3 Environmental Impacts and Assessment

Applicant Proposed Measures

The applicant has not incorporated applicant proposed measures into the proposed project to specifically minimize or avoid impacts on mineral resources. A list of all project APMs is included in Table 4-5.

Impacts on Mineral Resources

Table 5.11-1 includes the significance criteria from Appendix G of the California Environmental Quality Act Guidelines' mineral resources section to evaluate the environmental impacts of the proposed project.

Table 5.11-1 Mineral Resources Checklist

Would the project:	Potentially Significant Impact	Less Than Significant with Mitigation Incorporation	Less Than Significant Impact	No Impact
a. Result in the loss of availability of a known mineral resource that would be of value to the region and the residents of the state?	☐	☐	☐	☒
b. Result in the loss of availability of a locally-important mineral resource recovery site delineated on a local general plan, specific plan or other land use plan?	☐	☐	☐	☒

a. Would the project result in the loss of availability of a known mineral resource that would be of value to the region and the residents of the State?

NO IMPACT

No mining operations or oil and gas resources are known to be present on or adjacent to the project area. The project area is not in an area classified as MRZ-2, such that no significant mineral deposits are known in the project area. The proposed project would therefore result in no impact under this criterion.

b. Would the project result in the loss or availability of a locally important mineral resource recovery site delineated on a local general plan, specific plan, or other land use plan?

NO IMPACT

Locally important mineral resources have not been identified in the project area in the Fresno County General Plan. There would be no impact to locally important mineral resources.

This page intentionally left blank.

5.12 Noise

This section describes the environmental and regulatory setting and discusses impacts associated with the construction and operation of the Sanger Substation Expansion Project (proposed project) proposed by Pacific Gas & Electric Company (PG&E, or the applicant) with respect to noise and vibration.

5.12.1 Environmental Setting

Fundamentals of Noise and Vibration

Noise is defined as unwanted and objectionable sound. Noise is measured in terms of sound-pressure level using units called decibels (dBs). The most common system used by regulatory bodies for noise measurement is the A-weighted decibel scale. The A-weighted decibel (dBA) scale measures sound as an approximation of how a person perceives or hears sound. Since the range of intensities that the human ear can detect is large, the scale is based in multiples of 10, the logarithmic scale. Each interval of 10 decibels indicates a sound energy 10 times greater, which is perceived by the human ear as being roughly twice as loud. Table 5.12-1 contains definitions of acoustical terms used in this analysis.

Table 5.12-1 Definition of Acoustical Terms

Term	Definition
Noise	Unwanted sound, which occurs as a rapid fluctuation of air pressure above and below the atmospheric pressure. There are two important characteristics of noise: frequency and loudness. The number of pressure variations per second is called the frequency of sound and is measured in Hertz. The higher the frequency, the more high-pitched a sound is perceived to be. Loudness is measured in decibels, which are defined further below.
Decibel	Noise is measured in terms of sound-pressure level using units called decibels (dB). Since the range of intensities that the human ear can detect is large, the scale is based in multiples of 10, the logarithmic scale. Each interval of 10 dB indicates a sound energy 10 times greater. Each interval is perceived by the human ear as being roughly twice as loud.
A-weighted decibel (dBA)	The most common system used by regulatory bodies for noise measurement is the A-weighted decibel (dBA) scale. This scale measures sound as an approximate to how a person perceives or hears sound. A-weighted sound levels are typically measured or presented as the equivalent sound pressure level (L_{eq}).
Equivalent sound pressure level (L_{eq})	The average noise level, on an equal energy basis for a stated period of time. Sound levels are usually best represented by an equivalent level over a given time period (L_{eq}) or by an average level occurring over a 24-hour day-night period (L_{dn}).
Statistical noise measurement	Statistical methods are used to capture the dynamics of a changing acoustical environment. Statistical measurements are typically denoted by L_{xx}, where xx represents the percentage of time the sound level is exceeded. For example, L_{90} represents the noise level exceeded during 90 percent of the measurement period. Similarly, L_{10} represents the noise level exceeded for 10 percent of the measurement period.
Day–night average sound level (L_{dn}) noise level	The L_{dn}, or day-night average sound level (DNL), is equal to the 24-hour A-weighted equivalent sound level that is weighted to account for differences in noise levels and the perception of noise during nighttime hours (10 p.m. to 7 a.m.). Most household noise also decreases at night, however, and exterior noise becomes more noticeable.

Noise levels in communities usually relate to the intensity of nearby human activity. Noise levels are generally considered to be low at levels below 45 dBA, moderate in the 45 to 60 dBA range, and high above 60 dBA. In wilderness areas, the L_{dn} noise levels can be below 35 dBA. In small towns or wooded and lightly used residential areas, the L_{dn} is more likely to be around 50 to 60 dBA.

The general human response to changes in noise levels that are similar in frequency content (e.g., increases in continuous [L_{eq}] traffic noise levels) are summarized as follows:

- A 3-dB change in sound level is considered a barely noticeable difference.
- A 5-dB change in sound level will typically be noticeable.
- A 10-dB change is considered to be a doubling in loudness.

Ambient Noise Levels in the Project Area

The proposed project would be located in rural and agricultural area of central Fresno County and on U.S. Forest Service (USFS) land in the Sierra National Forest at the Fence Meadow Repeater Station. Noise and vibration in central Fresno County is mainly the result of vehicular traffic on the adjacent roadways, with increased noise levels occurring during peak traffic hours. Crop harvesting and irrigation operations that involve the use of machinery (tractors, harvesters, irrigation pumps, and lines) generate additional intermittent noise in the project area, primarily during the daytime hours. Noise in the Sierra National Forest at the Fence Meadow Repeater Station primarily comes from intermittent on-road and off-highway vehicle (OHV) traffic along nearby roads and from vehicle traffic and maintenance work associated with the Fence Meadow Fire Lookout Station adjacent to the communications site. The noise level for a wooded area is about 20 to 30 dBA (California Board of Forestry and Fire Protection 2016). Maximum noise from OHVs is estimated to be no greater than 96 dBA measured at 20 inches. The USFS assumes that, generally, noise up to a half mile from OHVs would be detectable and present a noise impact to non-motorized recreation (USFS 2010). The estimated noise level from OHVs perceived at a distance of 0.5 miles would be 32 dBA. This level of noise may occur periodically at the Fence Meadow Repeater Station as part of existing conditions.

According to noise measurements obtained for the Fresno County General Plan Background Report, day-night average noise levels in the central area of Fresno County, including the proposed project area, are 61 dBA (L_{dn}) (Fresno County 2000a).

In addition, the operation of two 30-megavolt ampere distribution transformers at the existing Sanger Substation produces a constant, low-level humming noise in the project area. According to the National Electrical Manufacturer's Association (NEMA 2014), standard audible sound levels for this size of electrical transformers are in the range of 63 decibels per unit at 3 feet from the source. One of the transformers is located in the southeastern portion of the existing substation site approximately 180 feet from the property line facing East Jensen Avenue; at this location, the operational noise level from this transformer is about 27 dBA, L_{dn}. The second transformer is located in the northeastern portion of the existing substation site, approximately 105 feet from the property line facing South McCall Avenue; at this location, transformer noise is about 33 dBA. Given that the transformers are at least 100 feet from the existing substation property line, and that levels between 27 to 33 dBA are lower than the reported ambient noise level, the transformer noise is not distinguishable outside the property line of the existing substation.

Vibration

Another community annoyance related to noise is vibration. As with noise, vibration can be described by its amplitude and frequency. Amplitude may be characterized by displacement, velocity, and/or acceleration. Frequency of vibration can also change human perception—usually the longer the event and the higher the frequency, the more adverse the effect on human response (Caltrans 2013). Vibration can be felt outdoors, but the perceived intensity of vibration impacts are much greater indoors due to the shaking of the structure. Human response to vibration is difficult to quantify, and vibration can be perceived at levels that are below those required to produce any damage on structures. Typically,

perception and annoyance are higher for transient rather than for continuous vibration. The background velocity level in residential areas is usually 50 vibration decibels (VdB), which is presumed to be the background vibration level in the project area (FTA 2006).

Sensitive Receptors

Noise- and vibration-sensitive receptors include residences, hospitals, religious congregations, schools and libraries, nature and wildlife preserves, and parks. In addition to these land uses, research laboratories are also sensitive to groundborne vibration. The only sensitive receptors within 1,000 feet of the proposed project area are residences. No schools, hospitals, churches, parks, or other noise-sensitive land uses are located within 0.5 miles of the proposed project area. Table 5.12-2 and Figure 5.12-1 identify and show the residences near the proposed project. The Fence Meadow Repeater Station is located within a National Forest; however, no campsites, hiking trails, or other areas where sensitive receptors would be found are located within 1,000 feet of the repeater station. The nearest campsite is approximately two miles northeast of the repeater station. No airports or private airstrips are located within 2 miles of the proposed project area.

Table 5.12-2 Sensitive Receptors within 1,000 Feet of the Proposed Project Area

Sensitive Receptor ID	Nearest Project Component	Approximate Distance from the Project Component[1] (feet)	Direction from Sanger Substation
SR1	Power line reconfiguration (new 115-kV subtransmission line pole)	216	South
SR2	Substation expansion	267	North
SR3	Power line reconfiguration (temporary access road)	131	West
SR4	Power line reconfiguration (pull and tension site)	557	East
SR5	Power line reconfiguration (existing line to be removed)	605	Southeast
SR6	Power line reconfiguration (temporary access road)	133	West
SR7	Power line reconfiguration (pull and tension site)	762	Northwest
SR8	Power line reconfiguration (pull and tension site)	802	West

Source: PG&E 2016.

Note:

[1] Distance was measured from the closest point from the proposed project component to the closest point of each residence. Measurements to SR1 and SR2 were verified on the field by utilizing Differential Global Positioning System (GPS) and conventional surveying methods.

5.12.2 Regulatory Setting

Federal and State

Sierra National Forest

The Sierra National Forest Land Management Plan does not contain specific standards. However, when evaluating noise effects from OHV use, the USFS considered noise generated from within a half mile of an engine 96 decibels or louder a severe impact on non-motorized recreation (USFS 2010).

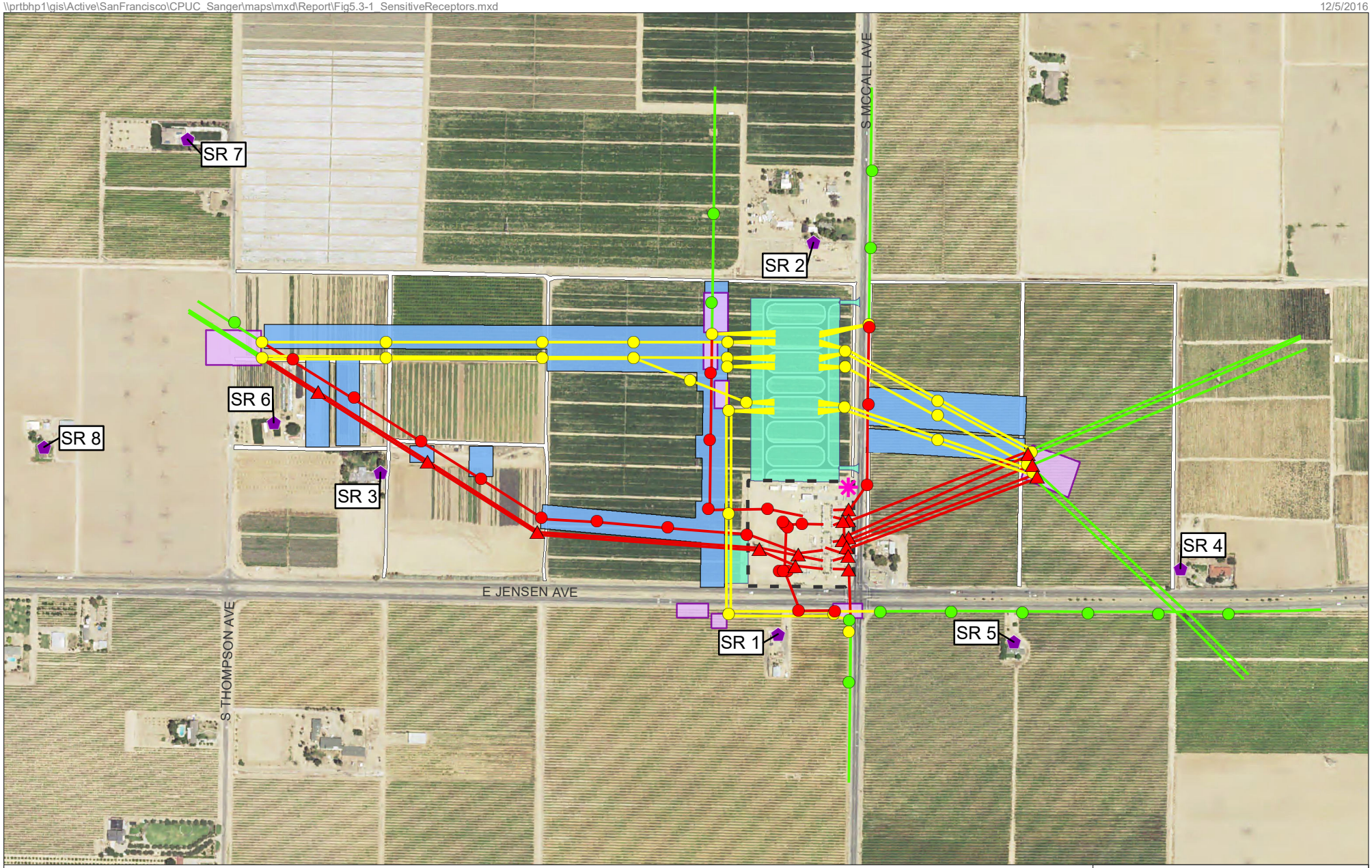

Figure 5.12-1
Sensitive Receptors
Sanger Substation
Fresno County, CA

Local

Fresno County General Plan

The Health and Safety Element of the County of Fresno General Plan (Fresno County 2000b) includes the following policies that are related to noise.

- ***Policy HS-G.6:*** *The County shall regulate construction-related noise to reduce impacts on adjacent uses in accordance with the County's Noise Control Ordinance.*
- ***Policy HS-G.8:*** *The County shall evaluate the compatibility of proposed projects with existing and future noise levels through a comparison to Chart HS-1* (refer to Table 5.12-3 below which has been modified from the original to show only the applicable land use categories in the vicinity of the project, according to Chart HS-1 in the Fresno County General Plan).
- ***Policy PF-J.2:*** *The County shall work with local gas and electric utility companies to design and locate appropriate expansion of gas and electric systems, while minimizing impacts to agriculture and minimizing noise, electromagnetic, visual, and other impacts on existing and future residents.*

Table 5.12-3 Land Use Compatibility for Community Noise Environments

Land Use Category	Community Noise Exposure (Outdoor) Day-Night Average Sound Level (L_{dn}) or Community Noise Equivalent Level (CNEL), decibels (dB)							
	50	55	60	65	70	75	80	85
Residential: Low-Density Single Family, Duplex, Mobile Homes								
Office Buildings, Business Commercial and Professional								
Industrial, Manufacturing, Utilities, Agriculture								

	Normally Acceptable	Specified land use is satisfactory based upon the assumption that any buildings involved are of normal conventional construction, without any special noise insulation requirements.
	Conditionally Acceptable	New construction of development should be undertaken only after a detailed analysis of the noise reduction requirement is made and needed noise insulation features included in the design. Conventional construction, but with closed windows and fresh air supply systems or air conditioning would normally suffice.
	Generally Unacceptable	New construction of development should generally be discouraged. If new construction or development does proceed, a detailed analysis of the noise reduction requirements must be made and needed noise insulation features included in the design.
	Land Use Discouraged	New construction or development should generally not be undertaken.

Source: Fresno County 2000b.

Fresno County Noise Control Ordinance

Chapter 8.40 of the Fresno County Ordinance Code establishes noise standards to protect the health, safety, and welfare of those living and working in the county and to implement policies of the Fresno County General Plan Health and Safety Element. Notably, the following activities are exempt from the provisions of Chapter 8.40, per section 8.40.060:

- *Noise sources associated with work performed by private or public utilities in the maintenance or modification of its facilities.*
- *Any activity to the extent regulation thereof has been preempted by state or federal law.*

Table 5.12-4 summarizes the outdoor noise standards that are established for noise-sensitive receptors in Fresno County. Section 8.40.090 of the Fresno County Ordinance Code states that "Notwithstanding the provisions of Section 8.40.040, noise sources associated with the operation of electrical substations shall not exceed 50 dBA when measured as provided in Section 8.40.030."

Table 5.12-4 Fresno County Exterior Noise Standards

Category	Cumulative Number of Minutes in any 1-Hour Time Period	Noise Level Standards, dBA	
		Daytime 7 a.m. to 10 p.m.	Nighttime 10 p.m. to 7 a.m.
1	30	50	45
2	15	55	50
3	5	60	55
4	1	70	60
5	0	70	65

Source: Municipal Code Corporation 2016.
Note: Per Section 8.40.030 of the Fresno County Code, exterior noise levels are to be measured within 50 feet of the affected residence, school, hospital, church or public library and that interior noise levels are to be measured within the affected dwelling unit.
Key:
dBA A=weighted decibels

Section 8.40.060C of the Fresno County Ordinance Code specifies that construction-related activities are exempt from noise standards and policies, provided that construction activities do not occur before 6 a.m. or after 9 p.m. on Monday through Friday, or before 7 a.m. or after 5 p.m. on Saturday or Sunday.

5.12.3 Environmental Impacts and Assessment

Applicant Proposed Measures

The applicant has incorporated applicant proposed measures (APMs) for the proposed project to specifically minimize or avoid impacts from noise. Not all APMs were applied to reduce impacts however; APM NOI-1 was not applied to reduce impacts on noise because impacts could not be minimized through application of this APM. Nonetheless, APM NOI-1 would be implemented by PG&E because it is considered to be part of the project. A list of all project APMs is included in Table 4-5.

APM NOI-1: Construction schedule limits. PG&E will limit construction hours so that construction will not occur before 6:00 a.m. or after 9:00 p.m. on any day except Saturday or Sunday, when construction will not occur before 7:00 a.m. or after 5:00 p.m. If nighttime work is needed because of clearance restrictions on the power line, PG&E will take appropriate measures to minimize

disturbance to local residents, including contacting nearby residences to inform them of the work schedule and probable inconveniences.

APM NOI-2: Construction equipment noise reduction devices and low noise equipment. PG&E shall include noise control requirements in specifications provided to construction contractors. Such contract specifications would include, but not be limited to, performing all work in a manner that minimizes noise; use of equipment with effective mufflers; use of "quiet" equipment (i.e., equipment that incorporates noise control elements into the design—compressors have "quiet" models) whenever possible; using equipment that is specifically designed for low noise emissions and equipment powered by electric or natural gas as opposed to diesel or gasoline; and undertaking the most noisy activities during the daytime to minimize disturbance to surrounding residents.

APM NOI-3: Placement of stationary construction equipment. Stationary equipment used during construction will be located at a minimum distance of 200 feet from sensitive noise receptors.

APM NOI-4: Minimization of unnecessary engine idling. Unnecessary engine idling will be limited. (See APM GHG-1.)

APM NOI-6: Noise disruption minimization through residential notification. Residents in areas of heavy construction noise will be notified prior to commencing construction activities. Notification will include written notice and the posting of signs in appropriate locations with a contact number that residents can call with questions and concerns.

Noise Impacts

Table 5.12-5 includes the significance criteria from Appendix G of the California Environmental Quality Act Guidelines' noise section to evaluate the environmental impacts of the proposed project. The project area is not located in an airport land use plan or within 2 miles of a public airport or public use airport; therefore, there would be no impact under criterion (e), and a detailed discussion is not provided. The proposed project would not be in the vicinity of a private airstrip; there would be no impact under criterion (f), and a detailed discussion is not provided.

Table 5.12-5 Noise Checklist

Would the project result in:	Potentially Significant Impact	Less Than Significant with Mitigation Incorporation	Less Than Significant Impact	No Impact
a. Exposure of persons to or generation of noise levels in excess of standards established in the local general plan or noise ordinance, or applicable standards of other agencies?	☐	☐	☐	☒
b. Exposure of persons to or generation of excessive groundborne vibration or groundborne noise levels?	☐	☐	☒	☐
c. A substantial permanent increase in ambient noise levels in the project vicinity above levels existing without the project?	☐	☐	☐	☒
d. A substantial temporary or periodic increase in ambient noise levels in the project vicinity above levels existing without the project?	☐	☐	☒	☐

Table 5.12-5 Noise Checklist

Would the project result in:	Potentially Significant Impact	Less Than Significant with Mitigation Incorporation	Less Than Significant Impact	No Impact
e. For a project located within an airport land use plan or, where such a plan has not been adopted, within two miles of a public airport or public use airport, would the project expose people residing or working in the project area to excessive noise levels?	☐	☐	☐	☒
f. For a project within the vicinity of a private airstrip, would the project expose people residing or working in the project area to excessive noise levels?	☐	☐	☐	☒

a. Would the project result in exposure of persons to or generation of noise levels in excess of standards established in the local general plan or noise ordinance, or applicable standards of other agencies?

NO IMPACT

US Forest Service

The USFS does not have established noise standards for activities within the Sierra National Forest. Therefore, there would be no impact from construction or operation of the proposed project at the Fence Meadow Repeater Station as a result of noise levels in excess of applicable standards.

Fresno County

Pursuant to California Public Utilities Commission (CPUC) General Order No. 131-D, the CPUC has exclusive jurisdiction over the siting and design of the proposed project, and local land use regulations are preempted and would not apply to the proposed project. However, this analysis discusses whether construction or operation of the proposed project would conflict with Fresno County General Plan policies or noise ordinance.

Ordinance Code

Fresno County noise regulations are provided in Section 5.12.2, "Regulatory Setting." The Fresno County Ordinance Code exempts from noise control provisions (including those related to construction activities) the following sources and activities:

- *Noise sources associated with work performed by private or public utilities in the maintenance or modification of its facilities*
- *Any activity to the extent regulation thereof has been preempted by state or federal law*

The proposed project would involve modification of existing facilities during construction and would then involve maintenance during operations. Furthermore, pursuant to CPUC General Order No. 131-D, local noise regulations are preempted by state law. For this reason, construction, operation, and maintenance of the proposed project is exempt from the Fresno County Ordinance Code. There would be no impact related to the Fresno County Ordinance Code.

Fresno County General Plan

Construction

The General Plan has no numerical threshold or other guidance for noise during construction activities. Therefore, there would be no impact during construction as a result of exceeding an established local noise standard.

Operation and Maintenance

After expansion of the substation, and during operation of the proposed project, the transformers would remain in the same location and no new equipment that would generate additional noise or exceed existing noise levels would be installed at the substation. Maintenance activities would also be the same as currently conducted and would therefore not generate new noise despite the increased size of the substation area. There would be no noise impact and therefore no conflict with the General Plan.

Operation of the proposed reconfigured115-kilovolt (kV) lines would generate corona noise. The corona effect is the ionization of the air that occurs at the surface of the energized conductor and suspension hardware due to very high electric field strength at the surface of the metal during certain conditions. The corona discharge occurs at the conductor surface, representing a small dissipation of heat and energy in the form of local pressure changes that may result in audible noise or radio and television interference. Audible noise levels from the reconfigured115-kV subtransmission line segments are expected to be relatively low, generally less than 34 dBA in rainy conditions directly below the conductor. The proposed powerline reconfiguration would not increase voltage or require co-location of conductors and new structures that would increase the corona effect from existing lines. Therefore, corona noise generated by the reconfigured power lines would be the same as the existing power lines and so would not generate new noise. Even though the transmission lines would be shifted slightly from their current position, the corona noise would still be below ambient levels and would not violate standards in the Fresno County General Plan policy related to noise compatibility (Policy HS-G.8).

b. Would the project result in exposure of persons to or generation of excessive groundborne vibration or groundborne noise levels?

Construction

LESS THAN SIGNIFICANT IMPACT

During project construction, groundborne vibration would occur mainly from heavy-duty equipment (e.g., trucks, backhoes, and cranes) driving on uneven surfaces or excavating or compacting the ground surface. The level of groundborne vibration from construction activities at a particular distance from the vibration source depends on the distance between the source and the receptor, the type of equipment used, and the soil conditions at and between the construction site and the receptor. Activities associated with truck traffic, construction of the expanded substation, and excavation for and installation of the tubular steel poles for the reconfigured electrical lines would have the greatest potential to cause groundborne vibration. Construction-related groundborne vibration impacts generally occur within 50 feet of the generating source due to the rapid attenuation of vibration over distance.

Table 5.12-6 shows the estimated vibration levels for typical construction sources associated with the proposed project at the closest sensitive receptor. Vibration levels from all equipment would be far below the residential annoyance threshold (80 VdB). In addition, construction would occur during daytime hours, when residences are least sensitive. Construction in these areas would also be temporary, and vibration would be intermittent. Vibration related to construction of the proposed antenna system at Fence Meadow Repeater Station would not be detectable to sensitive receptors. Therefore, vibration impacts would be less than significant.

Table 5.12-6 Vibration Levels from Typical Construction Equipment

Vibration Source	Estimated Vibration Level at Closest Sensitive Receptors (VdB)(1)	
	Powerline Reconfiguration (84 feet)	Substation Expansion (229 feet)
Large bulldozer	71	58
Drilling equipment	71	58
Loaded trucks	70	57
Small bulldozer	42	29
Criteria of residential annoyance for infrequent vibration events (FTA)	80	80
Exceeds threshold?	No	No

Sources: FTA 2006.
Key:
FTA Federal Transit Administration.
VdB decibels of vibration velocity
Note:
There are no sensitive receptors near the Fence Meadow Repeater Station. Therefore, no vibration measurement for construction activities at Fence Meadow Repeater Station is included in this table.

Operation and Maintenance

Operation and maintenance of the proposed project would involve activities similar to those associated with the existing Sanger Substation and the existing microwave communications site at Fence Meadow Repeater Station; therefore, no vibration impact would occur.

c. Would the project result in substantial permanent increase in ambient noise levels in the project vicinity above levels existing without the project?

Construction

NO IMPACT

Construction of the proposed project would not create permanent sources of noise; construction activities would involve equipment temporarily on site during the construction period (approximately 24 to 30 months). Therefore, there would be no substantial permanent change in ambient noise. The potential temporary increase in ambient noise levels associated with construction activities is discussed under criterion (d).

Operation and Maintenance

LESS THAN SIGNIFICANT IMPACT

During operation of the proposed project, the transformers would remain in their current location after construction, and no new equipment that would generate additional noise would be installed at the substation. There would be no permanent increase in noise levels due to substation equipment operation.

Corona noise (crackling, hissing, or humming noises heard during foggy or rainy weather) associated with operation of the proposed project's reconfigured power lines is not anticipated to be louder than the existing noise level from the existing 115-kV subtransmission lines (below approximately 34 dBA) because it would be quieter than the ambient noise level. Impacts would be less than significant.

Operation of the proposed microwave dish antennas at the existing Fence Meadow Communications Site would not generate an increase in noticeable permanent noise at the Fence Meadow Repeater Station. Noise from vehicles and equipment used during routine maintenance activities would be infrequent and would not result in a permanent increase to ambient noise levels. Impacts would be less than significant.

d. Would the project result in a substantial temporary or periodic increase in ambient noise levels in the project vicinity above levels existing without the project?

Construction

LESS THAN SIGNIFICANT IMPACT

A substantial noise increase is typically defined as 10 dBA for purposes of this analysis because an increase of 10 dBA is perceived as a doubling in loudness. The average ambient noise level for areas in central Fresno County is 61 dBA, L_{dn}. An increase would therefore be substantial if the project would increase ambient noise levels to 71 dBA, L_{dn} or greater.

During the week of construction at the Fence Meadow Repeater Station, noise would be generated primarily from the use of one crane. Noise from a typical crane used for construction is estimated to be 85 dBA at 50 feet (FHWA 2006). There are no sensitive receptors within 1,000 feet of the Fence Meadow Repeater Station, and no construction will occur within 2 miles of any other sensitive receptor. Noise would not be perceptible to any sensitive receptors. Impacts in the Sierra National Forest would be less than significant.

During the 24- to 30-month project construction period for work in central Fresno County, noise would be generated primarily by the use of heavy-duty equipment, worker vehicles, and trucks needed to bring materials to the construction sites. Table 5.12-7 shows the estimated combined noise exposure level as perceived at the nearest sensitive receptors identified in Table 5.12-2. As shown in Table 5.12-7, during project construction ambient noise levels in the project vicinity would increase above baseline conditions on a temporary and intermittent basis and would exceed thresholds at the closest sensitive receptors during all phases of construction. However, this temporary intermittent noise increases would be attenuated by the presence of physical barriers (e.g., irrigation ditch, roads, and building structures) and soft ground surrounding the substation. Implementation of APMs NOI-2, NOI-3, and NOI-4 would further minimize construction noise impacts. Specifically, the use of noise control devices described in APM NOI-2 would provide noise reductions from heavy construction equipment (for example, industrial/commercial grade mufflers can provide up to 15 dBA in reduction from the source); therefore, it is expected that – with implementation of APM NOI-2 - ambient noise level in the vicinity of the project would be below 71 dBA at all sensitive receptors. Construction impacts would therefore be less than significant after implementation of APMs.

Table 5.12-7 Estimated Combined Construction Noise Exposure at Sensitive Receptors

Sensitive Receptor ID	Nearest Project Component and Construction Phase	Approximate Distance from the Project Component (feet)[1]	Estimated Construction Noise Exposure at Sensitive Receptor without APMs (L_{dn}, dBA)[2]	Exceeds Threshold?
SR1	Power line reconfiguration (new 115-kV subtransmission line pole, Phases 4a to 4d)	216	69	No
SR2	Substation expansion (Phases 1, 2, and 3)	267	71	No
SR3	Power line reconfiguration Temporary access road use (Phases 2 to 5)	131	 70	 No
SR4	Power line reconfiguration (pull and tension site, Phases 4b, 4c, and 4d)	557	67	No
SR5	Power line reconfiguration (existing line to be removed, Phases 4b, 4c, and 4d)	605	67	No
SR6	Power line reconfiguration Temporary access road use (Phases 2 to 5)	133	 70	 No
SR7	Power line reconfiguration (pull and tension site, Phases 4b, 4c, and 4d)	762	65	No
SR8	Power line reconfiguration (pull and tension site, Phases 4b, 4c, and 4d)	802	64	No

Source: PG&E 2015; FHWA 2006; Caltrans 1987.

Notes:

(1) Conservative noise estimates assuming multiple pieces of equipment listed by the applicant for each phase would be operating simultaneously during a 1-hour period. The estimated construction noise exposure has been calculated using the geometrical spreading approach (i.e., the sound level is reduced by 6 dB for each doubling of distance from a fixed noise source), considering the effect of soft ground attenuation in non-paved areas, and adjusted to L_{dn}.

(2) The applicant would use overland access roads. Noise from temporary roads would occur due to vehicle use of roads in support of construction activities. Noise from road use has been estimated using the California Vehicle Noise Reference Energy Mean Emission Levels, assuming one heavy truck pass at a speed of 25 miles per hour.

Key:

dB decibels
dBA A-weighted decibel
L_{eq} (h) Hourly equivalent sound level.

Operation and Maintenance

NO IMPACT

Operation and maintenance of the proposed project would involve periodic activities similar to those associated with the existing Sanger Substation and existing Fence Meadow Communications Site, including periodic inspection of the substation and electrical line. Therefore, no periodic noise impacts would occur during operation when compared to baseline. There would be no impact.

5.13 Population and Housing

This section describes the environmental and regulatory setting and discusses impacts associated with the construction and operation of Sanger Substation Expansion Project (proposed project) proposed by Pacific Gas and Electric Company (PG&E, or the applicant) with respect to population and housing. The proposed project would not involve displacement of housing or people; therefore, these impacts are not further discussed in this section.

As part of the proposed project, the applicant would mount two dishes, each measuring about 4 feet in diameter, on an existing tower at the Fence Meadow Repeater Station in the Sierra National Forest. The installation's construction would require up to three crew members. It would not involve displacement of housing or people or induce population growth. Therefore, the antenna system is not discussed further in this section.

5.13.1 Environmental Setting

The existing Sanger Substation is located on 4.5 acres of land in unincorporated Fresno County at the northwest corner of East Jensen and South McCall Avenues. The land surrounding the proposed project is flat and in agricultural use, with two residential dwellings located within 500 feet of the existing substation. Housing units in proximity to the substation are individual single-family dwellings carved out of the surrounding agricultural land.

The nearest population centers to the substation are the City of Sanger, approximately 2 miles to the east, and the City of Fresno, approximately 3.5 miles to the northwest. Table 5.3-1 summarizes the population and housing settings in the cities of Sanger and Fresno, and in Fresno County.

Table 5.13-1 Existing Conditions for Population and Housing

Location	Population	Housing Units	
		Total Units	Vacancy Rate (%)
City of Sanger	24,908	7,104	6.3
City of Fresno	515,986	171,288	7.6
Fresno County	974,861	315,531	8.3

Sources: Fresno County 2016; U.S. Census Bureau 2016a, 2016b.

Fresno County's population more than doubled from 1970 to 2010, with much of the growth occurring in the 1980s when the population increased by 30 percent. Between 2000 and 2010, the number of residents in Fresno County increased by 16 percent. However, the population living in unincorporated areas decreased over time from 43 percent in the 1970s to 21 percent in 2000, and to18 percent in 2010 (Fresno County 2015). The California Department of Transportation estimated that the population of Fresno County increased at an annual rate of 0.9 percent, attributed entirely to natural births, and forecasts that the population in Fresno County will grow approximately 1.2 percent from 2015 to 2020 (Caltrans 2016).

5.13.2 Regulatory Setting

There are no relevant federal, state, or local regulations related to population and housing.

5.13.3 Environmental Impacts and Assessment

Applicant Proposed Measures

The applicant has not incorporated applicant proposed measures into the proposed project to specifically minimize or avoid impacts on population and housing. A list of all project APMs is included in Table 4-5.

Impacts on Population and Housing

Table 5.13-2 includes the significance criteria from Appendix G of the California Environmental Quality Guidelines' population and housing section to evaluate the environmental impacts of the proposed project. The proposed project would not involve displacement of housing or people; therefore, impacts under criteria (b) and (c) impacts are not further discussed in this section.

Table 5.13-2 Population and Housing Checklist

Would the project:	Potentially Significant Impact	Less Than Significant with Mitigation Incorporation	Less Than Significant Impact	No Impact
a. Induce substantial population growth in an area, either directly (for example, by proposing new homes and businesses) or indirectly (for example, through extension of roads or other infrastructure)?	☐	☐	☒	☐
b. Displace substantial numbers of existing housing, necessitating the construction of replacement housing elsewhere?	☐	☐	☐	☒
c. Displace substantial numbers of people, necessitating the construction of replacement housing elsewhere?	☐	☐	☐	☒

a. Would the project induce substantial population growth in an area, either directly (for example, by proposing new homes and businesses) or indirectly (for example, through extension of roads or other infrastructure)?

Construction

LESS THAN SIGNIFICANT IMPACT

Construction crews are expected to be composed of a maximum of 30 people on site at any given time. Workers would be mostly from the Central Valley region. If workers from outside the area relocated, their relocation would likely be temporary. Population growth during construction would not be substantial. Impacts would be less than significant.

Operation and Maintenance

NO IMPACT

The proposed project would expand an existing, unstaffed substation. No new employees would be needed in the area to operate and maintain the substation. There would be no population growth associated with operation and maintenance of the substation. Furthermore, the proposed project is meant to increase reliability of the existing substation. Increased reliability would not induce electrical

consumption or create a surplus of electricity that would have the potential to indirectly induce substantial population growth in the service area. There would be no impact.

This page intentionally left blank.

5.14 Public Services

This section describes the environmental and regulatory setting and discusses impacts associated with the construction and operation of the Sanger Substation Expansion Project (proposed project) proposed by Pacific Gas and Electric Company (PG&E, or the applicant) with respect to public services.

As part of the proposed project, the applicant would mount two dishes, each measuring about 4 feet in diameter, on an existing tower at the Fence Meadow Repeater Station in the Sierra National Forest. The construction and operation of this installation would not require any new or altered government facilities or services because of the minimal level and short duration of activity required for construction and because operation and maintenance of the site would be comparable to existing activities. Therefore, the antenna system is not discussed further in this section.

5.14.1 Environmental Setting

Fire Protection

The Fresno County Fire Protection District (FCFPD) covers 2,655 square miles of the Central San Joaquin Valley and provides firefighting and emergency response services to a population of more than 220,000 citizens in both incorporated and unincorporated areas of Fresno County. Operating in conjunction with the California Department of Forestry and Fire Protection, the FCFPD provides emergency services from 13 district-staffed fire stations and five district-paid call fire stations. Fire protection and emergency response services for the proposed project area are provided by Battalion 18 of the FCFPD, which is based in the City of Sanger (FCFPD 2015).

Police Protection

The Fresno County Sheriff's Department (FCSD) provides law enforcement services to all unincorporated areas of Fresno County. Patrol Area 3 of the FCSD's Southwest Field Services Bureau encompasses a 559-square-mile area and provides law enforcement services for about 150,000 residents in southern Fresno County, including in the proposed project area (Fresno County Sheriff's Office 2016).

Schools

The proposed project site is located within District 4 of the Sanger Unified School District, which includes 21 elementary, middle, and high schools (Sanger Unified School District 2015). The nearest school facility, Ronald W. Reagan Elementary, is located 1.6 miles from the proposed project area.

Parks and Recreation Facilities

The nearest recreational facility to the proposed project area is Rotary Ball Park, approximately 2 miles southeast of the substation site, in the City of Sanger. Greenwood Park is located about 2.1 miles southeast of the substation site in the City of Sanger.

Hospitals

The nearest emergency care facilities to the proposed project area include the Clovis Community Medical Center, 9.5 miles northwest from the proposed project site, and the Community Regional Medical Center (also the region's trauma center), 10 miles west of the proposed project site.

5.14.2 Regulatory Setting

There are no relevant federal, state, or local regulations related to public services.

5.14.3 Environmental Impacts and Assessment

Applicant Proposed Measures

The applicant has not incorporated applicant proposed measures into the proposed project to specifically minimize or avoid impacts on public services. A list of all project APMs is included in Table 4-5.

Impacts on Public Services

Table 5.14-1 includes the significance criteria from Appendix G of the California Environmental Quality Act Guidelines' public services section to evaluate the environmental impacts of the proposed project.

Table 5.14-1 Public Services Checklist

Would the project:	Potentially Significant Impact	Less Than Significant with Mitigation Incorporation	Less Than Significant Impact	No Impact
Result in substantial adverse physical impacts associated with the provision of new or physically altered governmental facilities, need for new or physically altered governmental facilities, the construction of which could cause significant environmental impacts, in order to maintain acceptable service ratios, response times or other performance objectives for any of the public services:				
a. Fire protection?	☐	☐	☐	☒
b. Police protection?	☐	☐	☐	☒
c. Schools?	☐	☐	☐	☒
d. Parks?	☐	☐	☐	☒
e. Other public facilities?	☐	☐	☐	☒

Would the project result in substantial adverse physical impacts associated with the provision of new or physically altered governmental facilities, need for new or physically altered governmental facilities, the construction of which could cause significant environmental impacts, in order to maintain acceptable service ratios, response times or other performance objectives for any of the public services:

a. Fire protection?

Construction

NO IMPACT

Construction activities inherently increase fire risk; therefore, construction activities may incrementally increase demand on fire protection services. However, existing local firefighting and emergency response services are adequate and available to respond to a fire or medical emergency should an on-site incident occur. Risk of fire would not be greater than any other construction site, and construction would be

temporary. Therefore, no new or altered fire protection facilities would be needed as a result of construction of the proposed project. There would be no impact.

Operation and Maintenance

NO IMPACT

Operation of the expanded Sanger Substation and reconfigured power lines would be the same as current activities. Therefore, operation of the proposed project would not cause an increase in the need for fire protection services in the proposed project area, and no new or altered fire protection facilities would be required. There would be no impact.

b. Police protection?

Construction

NO IMPACT

Limited law enforcement services may be required to respond to any incidences of vandalism or robbery of materials stored on site during construction. However, existing police protection services are adequate to protect against vandalism, maintain the security of project facilities, and address potential safety emergencies that could occur within the project area during construction. Risk of these activities would be no greater than any other construction site, and construction would be temporary. Therefore, no new or altered police protection facilities would be needed as a result of construction of the proposed project. There would be no impact.

Operation and Maintenance

NO IMPACT

Operation of the expanded Sanger Substation and reconfigured power lines would be the same as current activities. Therefore, operation of the proposed project would not cause an increase in the need for police protection services in the proposed project area, and no new or altered police protection facilities would be required. There would be no impact.

c. Schools?

Construction

NO IMPACT

Construction crews are expected to be composed of a maximum of 30 people on site at any given time. Workers would be mostly from the local area or could commute from nearby areas. If workers from outside the area temporarily relocated, it is unlikely there would be an increase in use of local schools given that the relocation would be temporary, and workers would be dispersed throughout the broader area. Therefore, new or altered schools would not be needed. There would be no impact.

Operation and Maintenance

NO IMPACT

The Sanger Substation would be unstaffed; operation would be controlled from PG&E's Grid Control Center in Vacaville. The site would be visited by maintenance personnel on an intermittent basis only,

similar to current activities. Therefore, the proposed project would not increase the local population of school pupils, and there would be no need for new or altered schools. There would be no impact.

d. Parks?

Construction

NO IMPACT

Construction crews are expected to be composed of a maximum of 30 people on site at any given time. Workers would be mostly from the local area or could commute from nearby areas. If workers from outside the area temporarily relocated, the increase in use of local parks by up to 30 people for the 24- to 30-month construction period would be negligible and would not necessitate construction of new parks or modification of existing parks. There would be no impact.

Operation and Maintenance

NO IMPACT

The substation would be unstaffed; operation would be controlled from PG&E's Grid Control Center in Vacaville. The site would be visited by maintenance personnel on an intermittent basis only, similar to existing activities. Because the substation would be unstaffed, operation of the proposed project would have no effect on the use of existing neighborhood and regional parks or other recreation facilities and would not necessitate new or modified facilities. Operation of the proposed project would, therefore, result in no impact under this criterion.

e. Other public facilities?

Construction

NO IMPACT

Construction may temporarily increase demand for hospital services in case a worker is injured, as is the case with any construction activities. Existing facilities would be adequate to serve any workers. No new hospital facilities would be needed. There would be no impact.

Operation and Maintenance

NO IMPACT

The substation would be unstaffed; operation would be controlled from PG&E's Grid Control Center in Vacaville. The site would be visited by maintenance personnel on an intermittent basis only, similar to existing activities. Because the substation would be unstaffed, operation of the proposed project would have no effect on the use of hospitals. No new facilities would be needed. There would be no impact.

5.15 Recreation

This section describes the environmental and regulatory setting and discusses impacts associated with the construction and operation of the Sanger Substation Expansion Project (proposed project) proposed by Pacific Gas and Electric Company (PG&E, or the applicant) with respect to recreation.

As part of the proposed project, the applicant would mount two dishes, each measuring about 4 feet in diameter, on an existing tower at the Fence Meadow Repeater Station in the Sierra National Forest. Because the dishes would be installed on an existing structure in an area already used for telecommunications infrastructure and the construction activities would not involve construction of new recreation facilities or cause an increased use of existing recreation facilities, the antenna system is not discussed further in this section.

5.15.1 Environmental Setting

The proposed project would be located in Fresno County, California. The proposed project site is 3.5 miles southeast of the City of Fresno and 2 miles west of the City of Sanger. Most recreational areas, including hiking and biking trails in the county, are concentrated either within city boundaries or in the natural mountain areas located 10 miles east of the proposed project. The closest recreational facilities to the project area are:

- **Rotary Ball Park:** youth ball park and stadium; approximately 2 miles east of the project area in the City of Sanger.
- **Greenwood Park:** picnic areas, open grass, playground; approximately 2.1 miles east of the project area in the City of Sanger.

There are no recreational facilities or areas within or immediately adjacent to the project area.

5.15.2 Regulatory Setting

Federal and State

There are no federal or state regulations applicable to the proposed project related to recreation.

Local

Fresno County General Plan

At a regional level, Fresno County has recreation-related goals and policies identified in the "Open Space and Conservation Element" of the Fresno County General Plan, such as to designate and promote future development of public and private recreational facilities (Goal OS-H) and to develop recreation paths (Goal OS-1); however, these policies are not relevant to the analysis presented in this section (Fresno County 2000).

City of Sanger General Plan

The City of Sanger, in which the closest recreational facilities to the proposed project are located, also includes recreation-related goals and policies in "The Open Space, Recreation, and Public Facilities Element" of the Sanger General Plan, such as to provide adequate park and recreation facilities for the community (Goal 1) and to preserve open space from encroachment of urban land (Goal 4); however,

these goals are not relevant to the analysis presented in this section because the proposed project does not involve recreation facilities or open space (City of Sanger 2003).

5.15.3 Environmental Impacts and Assessment

Applicant Proposed Measures

The applicant has not incorporated applicant proposed measures into the proposed project to specifically minimize or avoid impacts on recreation. A list of all project APMs is included in Table 4-5.

Impacts on Recreation

Table 5.15-1 includes the significance criteria from Appendix G of the California Environmental Quality Guidelines' recreation section to evaluate the environmental impacts of the proposed project.

Table 5.15-1 Recreation Checklist

Would the project:	Potentially Significant Impact	Less Than Significant with Mitigation Incorporation	Less Than Significant Impact	No Impact
a. Increase the use of existing neighborhood and regional parks or other recreational facilities such that substantial physical deterioration of the facility would occur or be accelerated?	☐	☐	☒	☐
b. Include recreational facilities or require the construction or expansion of recreational facilities which might have an adverse physical effect on the environment?	☐	☐	☐	☒

a. Would the project increase the use of existing neighborhood and regional parks or other recreational facilities such that substantial physical deterioration of the facility would occur or be accelerated?

Construction

LESS THAN SIGNIFICANT IMPACT

Construction crews are expected to be composed of a maximum of 30 people on site at any given time. Workers would be mostly from the Central Valley region. If workers from outside the area temporarily relocate, the increase in use of local parks by up to 30 people for the 24- to 30-month construction period would be miniscule to nil, given that the existing park and recreation facilities in the City of Fresno and City of Sanger accommodate about 516,000 and 25,000 people, respectively (U.S. Census Bureau 2014a, 2014b). Any temporary increase in use of parks would be minimal and would not result in or accelerate substantial physical deterioration of existing neighborhood and regional parks or other recreational facilities. Construction of the proposed project would result in a less than significant impact under this criterion.

Operation and Maintenance

NO IMPACT

The substation would be unstaffed; operation would be controlled from PG&E's Grid Control Center in Vacaville. The site would be visited by maintenance personnel on an intermittent basis only. Since the

substation would be unstaffed, operation of the proposed project would have no effect on the use of existing neighborhood and regional parks or other recreation facilities. Operation of the proposed project would, therefore, result in no impact under this criterion.

b. Would the project include recreational facilities or require the construction or expansion of recreational facilities which might have an adverse physical effect on the environment?

NO IMPACT

The proposed project would not include recreation facilities or require the construction or expansion of recreation facilities. There would be no impact.

This page intentionally left blank.

5.16 Transportation and Traffic

This section describes the environmental and regulatory setting and discusses impacts associated with the construction and operation of the Sanger Substation Expansion Project (proposed project) proposed by Pacific Gas and Electric Company (PG&E, or the applicant) with respect to transportation and traffic.

5.16.1 Environmental Setting

Existing Roadway Network

The roadway network in the region of the proposed project consists of state highways and local roads within unincorporated Fresno County, as shown in Figure 4-1. The proposed project site is located on the northwest corner of the intersection of South McCall and East Jensen Avenues, with an existing substation access driveway off of South McCall Avenue. The installation of two dishes on an existing tower at the Fence Meadow Repeater Station would use SR 168 and two local roads in the Sierra National Forest.

State Routes

A number of major highways serve the area surrounding the proposed project, including State Route (SR) 180 and SR 99, and are listed in Table 5.16-1. The largest traffic volumes on these highways are on SR 168 in Fresno, with average daily traffic of 73,000 vehicles.

Table 5.16-1 State Routes and Local Roadways Impacted by Project-Related Traffic

Road	Description	Average Daily Traffic (vehicles)
State Routes		
SR 180[1]	• Four-lane divided highway • At grade intersections with turning lanes north of proposed project • Limited access, with ramp access in Fresno • No sidewalks present • No street parking allowed	16,300–25,800
SR 168[1]	• Eight-lane principal arterial • Interchange with SR 180, providing access from central and north Fresno area • No sidewalks present • No street parking allowed	73,000
Local Roadways		
East Jensen Ave[2]	• Four-lane minor arterial • Center median with turning lanes • No sidewalks present • No parking lane present.	27,080–32,255

Table 5.16-1 State Routes and Local Roadways Impacted by Project-Related Traffic

Road	Description	Average Daily Traffic (vehicles)
South McCall Ave[2]	• Two-lane roadway with center turning lanes • No sidewalks present • No parking lane present	9,262–13,086

(1) Source: Caltrans 2014a
(2) PG&E 2015
Key:
SR State Route
Ave Avenue
n/a not applicable

Local Roadways

Local roadways in the vicinity of the proposed project area include East Jensen Avenue and South McCall Avenue, which are both adjacent to the existing Sanger Substation. Local roadways are listed in Table 5.16-1. The greatest traffic volumes near the proposed project are on East Jensen Avenue, ranging from 27,080 vehicles per day east of South McCall Avenue to 32,255 vehicles per day west of South McCall Avenue. Other unpaved private access roads are located near the proposed project site and are used primarily for farm equipment. Two local roads in the Sierra National Forest, Dinkey Creek Road and Ross Crossing Road, lead to the Fence Meadow Repeater Station.

Public Transit

Orange Cove Transit provides intercity transit service between the cities of Orange Cove and Fresno. The fixed route service runs along East Jensen Avenue between the City of Fresno and the City of Sanger, passing by the proposed project area. The route does not include scheduled stops near the proposed project (Fresno County Rural Transit Agency n.d.). No rail lines would be crossed by the proposed project.

Parking

On-street parking is not available on roadways near the proposed project. Road shoulders on South McCall and East Jensen Avenues provide space for vehicles to pull over. No public parking lots are located in close proximity to the proposed project. Parking is available at the Fence Meadow Repeater Station for staff and workers.

Air Transportation

The Del Rey Juice Airstrip—a private airstrip not subject to Federal Aviation Administration (FAA) notification requirements for encroachment on imaginary surfaces per 14 Code of Federal Regulations (CFR) 77—is located approximately 3.6 miles south of the proposed project site. The Turner Field and Fresno Yosemite International Airport are both located within approximately 6.5 miles of the proposed project and outside of any imaginary slope extending from the runways, as defined by the FAA (14 Code of CFR 77).

Pedestrian and Bicycle Trails

There are currently no sidewalks, bicycle lanes, or other pedestrian or bicycle facilities near the proposed project site. The Fresno County Regional Bicycle & Recreational Trails Master Plan proposes a future Class II rural bikeway on East Jensen Avenue that would run from South McCall Avenue east to Academy Avenue. The bikeway would also be located along South McCall Avenue south of its intersection with East Jensen Avenue (Fresno County 2013).

Methodology

Level of Service Definition

Current guidelines under the California Environmental Quality Act (CEQA) for traffic impact analyses focus on analyzing the delay that vehicles experience at intersections and on roadway segments. That delay is measured using Level of Service (LOS). The Fresno County General Plan and the Fresno County Congestion Management Program contain LOS goals. Therefore, LOS is the most appropriate metric to identify potential impacts of construction activities on nearby roadway segments.

LOS is a quantitative measure that characterizes traffic congestion on a scale of A to F, with LOS A representing a free-flow condition and LOS F representing extreme congestion. LOS standards can apply to either intersections or segments (a section of street between two intersections). Generally speaking, LOS represents the ability of a roadway or an intersection to accommodate traffic. Table 5.16-2 provides the six LOS categories for basic freeway segments.

Table 5.16-2 Level of Service Criteria

Level of Service (LOS)	Description
LOS A	Describes free-flow operations. Free flow speed (FFS) prevails on the highway, and vehicles are almost completely unimpeded in their ability to maneuver within the traffic stream.
LOS B	Represents reasonably free-flow operations, and FFS on the highway is maintained. The ability to maneuver within the traffic stream is only slightly restricted, and the general level of physical and psychological comfort provided to drivers is still high.
LOS C	Provides for flow with speeds near the FFS of the highway. Freedom to maneuver within the traffic stream is noticeably restricted, and lane changes require more care and vigilance on the part of the driver.
LOS D	Denotes the level at which speeds begin to decline with increasing flows, with density increasing more quickly. Freedom to maneuver within the traffic stream is seriously limited, and drivers experience reduced physical and psychological comfort levels.
LOS E	Describes operation at capacity. Operations on the highway at this level are highly volatile because there are virtually no usable gaps within the traffic stream, leaving little room to maneuver within the traffic stream. The physical and psychological comfort afforded to drivers is poor.
LOS F	Describes breakdown, or unstable flow. Such conditions exist within queues forming behind bottlenecks.

Source: TRB 2010

Level of Service Calculation

This traffic analysis used the Highway Capacity Manual (TRB 2010), per guidelines from Fresno County and the California Department of Transportation (Caltrans) (Fresno County 2014; Caltrans 2002). Existing LOS was calculated for key road segments near the proposed project using generalized LOS tables presented in the Highway Capacity Manual. The daily traffic volumes from the Highway Capacity Manual that were used to determine LOS for different road types are presented in Table 5.16-3. Average daily traffic (ADT) volumes for key roadways within the project area were compared to daily traffic volumes in Table 5.16-3 to determine the existing LOS. A background growth factor of 1.1 percent based on county population growth projections from Caltrans was applied to 2014 ADT volumes to account for increases in traffic volumes between 2014 and the baseline used for the project impact analysis (2015) (Caltrans 2014b). The LOS standards in the county are presented in Table 5.16-5.

Table 5.16-3 Generalized Daily Traffic Volumes for Level of Service

Road Type	Level of Service			
	B	C	D	E
Four Lane Freeway(1)	37,100	51,600	64,300	74,500
Four Lane Rural Highway(2)	25,500	36,900	48,500	56,800

Table 5.16-3 Generalized Daily Traffic Volumes for Level of Service

Road Type	Level of Service			
	B	C	D	E
Two Lane Highway[3]	4,100	7,900	12,900	25,500

Source: Highway Capacity Manual 2010 (TRB 2010)
Notes:
[1] Highway Capacity Manual 2010, Chapter 10, Freeway Facilities, Exhibit 10-8 Generalized Daily Service Volumes for Urban Freeway Facilities
[2] Highway Capacity Manual 2010, Chapter 14, Multilane Highways, Exhibit 14-18 Generalized Daily Service Volumes for Rural Multilane Highways
[3] Highway Capacity Manual 2010, Chapter 15, Two-Lane Highways Exhibit 15-130 Generalized Daily Service Volumes for Two-Lane Highways
K-Factor of 9% and D-Factor of 65% were assumed for Traffic Volumes from the HCM 2010 Generalized Tables based on similar evaluation criteria for LOS in Table 4-6 of the Fresno County General Plan (Fresno County 2000)
K-factor: The proportion of average daily traffic that occurs during the peak hour.
D-factor: The proportion of traffic moving in the peak direction of travel on a given roadway during the peak hour.

Existing Levels of Service

Table 5.16-4 presents ADT and LOS results for the key roadways within the proposed project area.

Table 5.16-4 Existing Average Daily Traffic and Level of Service on State Routes and Local Roadways Impacted by Project-Related Traffic (2015)

Location	ADT	LOS[1]
SR 180[2]		
West of South McCall Ave	26,084	B
East of South McCall Ave	17,187	B
West of Academy Ave	16,479	B
SR 168[3]		
North of junction with SR 180	73,803	D
South of McKinley Ave	73,803	D
East Jensen Ave [2]		
West of South McCall Ave	32,255	B
East of South McCall Ave	27,080	B
South McCall Ave[4]		
North of East Jensen Ave	9,262	C
South of East Jensen Ave	13,086	D

Notes:
[1] Based on LOS criteria presented in Table 5.16-3.
[2] Four Lane Rural Highway
[3] Four Lane Freeway
[4] Two Lane Highway
LOS in bold represent road segments exceeding LOS standards under baseline conditions
Key:
ADT average daily traffic
Ave Avenue
LOS level of service
SR State Route

5.16.2 Regulatory Setting

Federal

Airspace Restrictions

FAA regulation 14 CFR 77 requires that the FAA be notified of any construction or alteration that would result in a structure being greater than 200 feet (61 meters) above ground level from its base or that would exceed a specified height from an imaginary slope extending from the nearest runway. The imaginary slope described below is measured from the nearest point of the runway nearest to the proposed structure (U.S. Government Publishing Office 2016):

- For airports with runways greater than 3,200 feet (975 meters) in length, 1 vertical foot (0.3 meters) for every 100 horizontal feet (30 meters) for a horizontal distance of 20,000 feet (6,096 meters).
- For airports with runways 3,200 feet (975 meters) or less in length, 1 vertical foot (0.3 meters) for every 50 horizontal feet (15 meters) for a horizontal distance of 10,000 feet (3,048 meters).
- For heliports, 1 vertical foot (0.3 meters) for every 25 horizontal feet (8 meters) for a horizontal distance of 5,000 feet (1,524 meters).

State

California Department of Transportation

Caltrans is responsible for overseeing state highways within California. Caltrans requires that an encroachment permit be obtained for all work done within a state highway right-of-way (ROW). Encroachment permits must also be obtained for transmission lines that span or cross any state roadways (Caltrans 2016a). In addition, Caltrans has the discretionary authority to issue special permits for the movement of vehicles or loads exceeding statutory limitations on the size, weight, and loading of vehicles contained in Chapters 1–5 of Division 15 Size, Weight, and Load of the California Vehicle Code. Completion of a Transportation Permit application is required for requests for such special permits (Caltrans 2016b). Guidelines provided by Caltrans indicate LOS C as the minimum LOS target for basic freeway segments and signalized intersections. Where state facilities currently operate below LOS C, the existing measure of effectiveness should be maintained (i.e., density for freeway segments and ramps, and control delay per vehicle for signalized intersections) (Caltrans 2002). Relevant transportation policies and ordinances are presented in Table 5.16-5.

Table 5.16-5 Relevant Transportation Policies and Ordinances

Policy	Description
California Department of Transportation	
Work in public ROW	An encroachment permit must be obtained for all proposed activities related to the placement of encroachments within, under, or over the state highway ROW.(1)
Oversize Vehicles	A special permit must be obtained to operate or move a vehicle or combination of vehicles or special mobile equipment of a size or weight of vehicle or load exceeding the maximum limitations on state highways. Maximum limitations are generally as follows: width = 102 inches, height = 14 feet, length = 75 feet, weight = 80,000 lbs.(1)
Target LOS Standard	LOS C(2)
Fresno County	
Work in public ROW	A permit from the Director of Public Works is required before excavation or installation of utilities above or under a county-maintained roadway or improved public roadway not maintained by the County.(3)

Table 5.16-5 Relevant Transportation Policies and Ordinances

Policy	Description
Oversize Vehicles	A special permit must be obtained from the director of public works to operate or move a vehicle, or combination of vehicles, or special mobile equipment of size or weight of vehicle or load exceeding the maximum specified in the California Vehicle Code.(3)
Target LOS Standard	Policy TR-A.2: The County shall plan and design its roadway system in a manner that strives to meet LOS D on urban roadways within the spheres of influence of the cities of Fresno and Clovis and LOS C on all other roadways in the county. (4)
Property Access	Policy TR-A.3: The County shall require that new or modified access to property abutting a roadway and to intersecting roads conform to access specifications in the Circulation Diagram and Standards section of the Fresno County General Plan.
Congestion Management Program	SR 168, SR 160, East Jensen Ave, and South McCall Ave are part of the Congestion Management Program highway and road system. The target LOS for Congestion Management Program Roadways is LOS C in unincorporated cities and LOS D in the Cities of Fresno and Clovis.(5)

Sources:
(1) California Vehicle Code Section 35100-35111, 35250-35252, 35400-35414, and 35550-35558 and Streets and Highways Code Section 670-695
(2) Guide for the Preparation of Traffic Impact Studies (Caltrans 2002)
(3) Fresno County Municipal code, Chapter 11.32
(4) County of Fresno General Plan Chapter 4: Transportation and Circulation (Fresno County 2000)
(5) Fresno County Congestion Management Process (CFCG 2009)

Key:
Ave Avenue
lbs pounds
LOS Level of Service
ROW right-of-way
SR State Route

Local

Fresno County Congestion Management Program

The Fresno County Congestion Management Program identifies SR 168, SR 160, East Jensen Avenue, and South McCall Avenue as part of the Congestion Management Program highway and road system. The LOS standard in the county is LOS C in unincorporated areas and LOS D on urban roadways in the cities of Fresno and Clovis. Relevant transportation policies from the Fresno County Congestion Management Program are presented in Table 5.16-5.

County General Plan and Municipal Codes

Local plans and municipal codes were reviewed for goals and policies related to the proposed project. Relevant transportation policies and ordinances are presented in Table 5.16-5.

5.16.3 Environmental Impacts and Assessment

Applicant Proposed Measures

The applicant has incorporated the following applicant proposed measure (APM) into the proposed project to specifically minimize or avoid impacts on transportation and traffic. A list of all project APMs is included in Table 4-5.

APM TRAN-1: Traffic Planning. PG&E will follow its standard safety practices as needed, including installing appropriate barriers between work zones and transportation facilities, posting adequate signs, and using proper construction techniques. PG&E is a member of the California Joint Utility Traffic Control Committee, which published the Work Area Protection and Traffic Control Manual (California Joint Utility Traffic Control Committee 1999). PG&E will follow the

recommendations in this manual regarding basic standards for the safe movement of traffic on highways and streets in accordance with Section 21400 of the California Vehicle Code. If required for obtaining a local encroachment permit, PG&E will establish a Traffic Management Plan (TMP) to address haul routes, timing of heavy equipment and building material deliveries, potential street and/or lane closures, signing, lighting, and traffic control device placement. Construction activities will be coordinated with local law enforcement and fire protection agencies. Emergency service providers will be notified as required by the local permit of the timing, location, and duration of construction activities.

Impacts on Transportation and Traffic

Table 5.16-6 includes the significance criteria from Appendix G of the CEQA Guidelines' transportation and traffic section to evaluate the environmental impacts of the proposed project.

Table 5.16-6 Transportation and Traffic Checklist

Would the project:	Potentially Significant Impact	Less Than Significant with Mitigation Incorporation	Less Than Significant Impact	No Impact
a. Conflict with an applicable plan, ordinance or policy establishing measures of effectiveness for the performance of the circulation system, taking into account all modes of transportation including mass transit and non-motorized travel and relevant components of the circulation system, including but not limited to intersections, streets, highways and freeways, pedestrian and bicycle paths, and mass transit?	☐	☒	☐	☐
b. Conflict with an applicable congestion management program, including, but not limited to level of service standards and travel demand measures, or other standards established by the county congestion management agency for designated roads or highways?	☐	☒	☐	☐
c. Result in a change in air traffic patterns, including either an increase in traffic levels or a change in location that results in substantial safety risks?	☐	☐	☐	☒
d. Substantially increase hazards due to a design feature (e.g., sharp curves or dangerous intersections) or incompatible uses (e.g., farm equipment)?	☐	☒	☐	☐
e. Result in inadequate emergency access?	☐	☒	☐	☐
f. Conflict with adopted policies, plans, or programs regarding public transit, bicycle, or pedestrian facilities, or otherwise decrease the performance or safety of such facilities?	☐	☒	☐	☐
g. Result in inadequate parking that would result in a significant impact on the environment?	☐	☐	☐	☒

Methodology

The analysis compared baseline traffic conditions (2015, refer to Table 5.16-4) with traffic conditions during peak construction in 2017. The following key assumptions were used in the traffic analysis:

- A background growth rate of 1.1 percent, based on population projections, was used for 2014 traffic volumes to account for regional growth in traffic volumes between 2014 and 2015;
- Traffic volumes under baseline conditions (2015) plus peak construction volumes from the project were considered representative of peak construction conditions in 2017 and no additional background growth rate was applied.
- Trip generation for the proposed project was based on anticipated construction vehicles and worker trips that would be needed for the various construction components to be completed during each phase of the proposed project; and
- Heavy vehicle trips were converted to passenger car equivalent trips using a multiplier of 1.5 as they are generally considered to have a greater impact on traffic than passenger vehicles (TRB 2010).

Traffic during operation and maintenance is expected to be negligible; therefore, the analysis relies on a qualitative description.

a, b. Would the project conflict with an applicable plan, ordinance, or policy establishing measures of effectiveness for the performance of the circulation system, taking into account all modes of transportation including mass transit and non-motorized travel and relevant components of the circulation system including, but not limited to, intersections, streets, highways and freeways, pedestrian and bicycle paths, and mass transit? Would the project conflict with an applicable congestion management program including, but not limited to, LOS standards and travel demand measures, or other standards established by the county congestion management agency for designated roads or highways?

Level of Service Overview

The analysis examined traffic conditions during peak construction in 2017. The change in LOS between baseline conditions (2015) without the project and those existing during peak construction conditions (2017) was considered significant if the project resulted in a road segment failing to meet the jurisdiction's significance threshold. The proposed Sanger Substation would be located within unincorporated Fresno County. The significance threshold for roadways was based on the LOS goals identified in Table 5.16-5.

Construction

LESS THAN SIGNIFICANT WITH MITIGATION

The proposed project would generate trips due to worker vehicles, equipment delivery, soil import and export, and other similar activities. Trips would vary throughout the 24- to 30-month construction period but would peak during Phase 3 and Phases 4a through 4d, which would be constructed concurrently. Equipment and component installation and power line reroutes taking place during these phases would generate up to 183 (one-way) daily passenger car equivalent trips, as shown in Table 5.16-7.

Table 5.16-7 Peak Daily Construction Trips

Project Component	Maximum Daily Trips	Passenger Car Equivalent	Maximum Daily Passenger Car Equivalent Trips
Construction Worker Vehicles	60	1	60
Equipment Delivery	22	1.5	33
Other Construction Support Trucks	60	1.5	90
Total	142		183

Source: PG&E 2015
Notes: Phase 3 would last for 261 workdays, and Phases 4a through 4d would last for shorter durations; however, it was assumed Phase 4a through 4d would happen concurrently and represents the maximum daily trips that could occur.

Table 5.16-8 shows the maximum increase in ADT on key roadways during peak project construction and the resulting LOS. All roadways in Table 5.16-8 are also Congestion Management Program roadways. The table reflects a scenario in which all project traffic follows one route, which is the most conservative scenario. It is not expected that all construction workers and delivery vehicles would access the project site using the same route; therefore, the actual increase in traffic on individual roads is expected to be lower than what is represented in Table 5.16-8. The proposed project would not result in a decrease in LOS on the studied road segments. As shown in Table 5.16-8, South McCall Avenue, south of East Jensen Avenue, is expected to exceed the target LOS in 2015 without the proposed project; however, the proposed project would not result in any further degradation of LOS. LOS impacts to road segments would be less than significant.

Table 5.16-8 Peak Average Daily Traffic and Level of Service Operation During Construction

Location	2015 ADT Without Project	2015 LOS Without Project	2017 ADT	2017 LOS(1)	LOS Threshold of Significance(2)	Exceed Target LOS?(1)
SR 180(3)						
West of South McCall Ave	26,084	B	26,267	B	C	No
East of South McCall Ave	17,187	B	17,370	B	C	No
West of Academy Ave	16,479	B	16,662	B	C	No
SR 168(4)						
North of junction with SR 180	73,803	D	73,986	D	D	No
South of McKinley Ave	73,803	D	73,986	D	D	No
East Jensen Ave(3)						
West of South McCall Ave	32,255	B	33,567	B	C	No
East of South McCall Ave	27,080	B	28,211	B	C	No
South McCall Ave (5)						
North of East Jensen Ave	9,262	C	9,769	C	C	No

Table 5.16-8 Peak Average Daily Traffic and Level of Service Operation During Construction

Location	2015 ADT Without Project	2015 LOS Without Project	2017 ADT	2017 LOS(1)	LOS Threshold of Significance(2)	Exceed Target LOS?(1)
South of East Jensen Ave	13,086	D	13,727	D	C	Yes

Notes:
(1) LOS Based on Highway Capacity Manual 2010 (TRB 2010).Table 4-6 Evaluation Criteria for Level of Service in the Fresno County General Plan (Fresno County 2000)
(2) LOS Threshold of Significance based on Fresno County Congestion Management Process (CFCG 2009)
(3) Rural Multi-Lane Highway; 4 lanes
(4) Urban Freeway Group 1; 8 lanes
(5) Rural 2-Lane Highway; 2 lanes
Note: SR 180, SR 168, East Jensen Ave., and South McCall Ave. have been identified as regionally significant roadways in the Fresno County Congestion Management Process (CFCG 2009)
Note: LOS in bold represent road segments exceeding LOS standards under baseline conditions.
Key:
ADT Average Daily Traffic
Ave Avenue
LOS level of service
SR State Route

Traffic would also increase at the intersection of South McCall and East Jensen Avenues during peak hours if construction-related traffic accesses the work area from East Jensen Avenue. However, the intersection is signalized for all approaches and includes left-turn-only lanes to facilitate traffic movement. The 183 peak construction trips would represent less than 1 percent of existing traffic volumes on East Jensen Avenue and less than 2 percent on South McCall Avenue and would not be expected to significantly increase delay at the intersection. Impacts to LOS at the intersection of South McCall and East Jensen Avenues would be less than significant.

Trucks entering the substation site during construction from South McCall Avenue could cause a substantial delay if they were queued on South McCall Avenue, which has one lane in each direction. An internal roadway and the two access points from South McCall Avenue would allow vehicles to enter the site in one location, drive through the site, and exit from the second access driveway. This would allow multiple vehicles to be on the site at one time. However, if more vehicles arrived at the site, they would queue on South McCall Avenue and cause a backup and temporary stalling of traffic. This could be a significant impact. APM TRAN-1 requires establishing a TMP only if required for obtaining a local encroachment permit. However, APM TRAN-1 lacks sufficient commitment to establish a TMP and lacks sufficient detail in addressing truck queuing at access driveways to determine that it would reduce impacts to less than significant. Impacts would therefore still be significant. MM TRAN-1 would supersede APM TRAN-1 and require that PG&E manage deliveries and on-site vehicles to avoid queuing on South McCall Avenue. Impacts would be less than significant with mitigation.

MM TRAN-1: Traffic Management Plan (supersedes APM TRAN-1). A Traffic Management Plan shall be prepared upon determination of the final construction schedule and precise locations and durations of lane closures and other project details. Measures to be included in the plan that would allow for:

- Safe vehicle passage shall adhere to the California Manual on Uniform Traffic Control Devices.
- Avoidance of truck queuing on South McCall Avenue of trucks waiting to enter the substation construction site.

Potential measures include:

- Flaggers and/or signage to halt traffic and direct traffic at lane closures and to allow traffic to pass when construction is halted.
- Scheduling lane closures at off-peak times.
- Notification of emergency services providers of the timing, location, and duration of lane closures.
- Requirement that emergency vehicle access is maintained at all times.
- Scheduling construction deliveries and employee arrival to be spread out throughout the day.
- Implementing traffic control within the substation site to move vehicles to allow arriving vehicles to enter the site.

The Traffic Management Plan shall also include the following measures:

- **Limit Vehicle Speeds:** Vehicle speeds shall be limited to 15 miles per hour on unpaved roadways used to access the site during construction. PG&E shall notify owners of property on which internal access roads are located at least one week in advance that the internal access road will be used for construction traffic.
- **Slow Truck Warning:** During truck delivery and exit hours, PG&E shall post signage at appropriate locations (e.g., along South McCall and East Jensen Avenues) warning drivers when there is a possibility for slow trucks to exit the substation site onto South McCall Avenue. Signage shall adhere to the California Manual on Uniform Traffic Control Devices.
- **Road Damage Repair:** PG&E shall repair to pre-project conditions any roads damaged by project vehicle traffic. PG&E shall document roadway conditions with photographs prior to project activities along East Jensen Avenue and South McCall Avenue adjacent to the project area and extending 0.25 miles from the project area. PG&E shall also take photographs after the project is completed and after any repairs that document restoration of pre-project pavement conditions.
- **Emergency Service Provider Notification:** PG&E shall notify the provider of the location, date, time, and duration of the lane closure. PG&E shall make provisions to maintain emergency vehicle access at all times in coordination with local emergency service providers, such as allowing for bypass of slow vehicle traffic during lane closures.

To the extent that compliance with applicable permit requirements, e.g., obtaining the required encroachment permit from Fresno County, would reduce identified significant traffic impact(s) consistent with the performance standards set forth in MM TRAN-1, PG&E may submit such permit(s) in lieu of addressing that impact, subject to review and approval by CPUC prior to the start of construction.

Installation of guard structures over South McCall and East Jensen Avenues to facilitate line stringing over those roads would require temporary partial closure of South McCall and East Jensen Avenues. Lane closure along East Jensen Avenue would not cause substantial delay because there are two lanes in each direction. Lane closure along South McCall Avenue, however, could cause traffic delays given there is only one lane of travel in each direction, which would be significant if traffic were backed up into and blocked the intersection of East Jensen Avenue and South McCall Avenue and if traffic was stopped in one direction for a substantial length of time. APM TRAN-1 requires adherence to practices in the Work Area Protection and Traffic Control Manual (California Joint Utility Traffic Control Committee 1999). However, the Work Area Protection and Traffic Control Manual would not provide specific details related to the proposed project (e.g., locations of lane closures, scheduling, notification, etc.); therefore,

APM TRAN-1 lacks sufficient detail to determine that it would reduce impacts to less than significant. Impacts would still be significant. MM TRAN-1 would supersede APM TRAN-1 and requires implementation of measures to reduce lane closure impacts to less than significant.

Construction work at the Fence Meadow Repeater Station would require one crane and one to two utility trucks with workers and equipment making daily trips. Construction is anticipated to take approximately one week. The maximum trips per day would include one round trip for crane delivery and two round trips for the crew vehicles. The negligible amount of trips during only one week would result in impacts that are less than significant.

Applicable Plans, Ordinances, and Policies

See the discussion above for an analysis of LOS standard used in the County of Fresno General Plan and Congestion Management Process.

Access Driveways

Two new access roads from South McCall Avenue would be created at the substation site. Policy TR-A.3 of the Fresno County General Plan requires new driveways to conform to access specifications in the Circulation Diagram and Standards section of the Fresno County General Plan. Specifications for two-lane collectors require turnarounds and access restrictions for major traffic generators (i.e., recreational areas, parks of regional significance, and other major public facilities). The proposed driveways would meet the specifications that require a turnaround to prevent vehicles from backing onto a roadway. The project would not be a major traffic generator; therefore, design requirements such as limits on the number and location of access points would not be needed. No new access driveways would be created at the Fence Meadow Repeater Station. The project would not conflict with policies regarding access driveways.

Operation and Maintenance

NO IMPACT

Operation and maintenance of the expanded substation, reconfigured transmission lines, and Fence Meadow Repeater Station would not change appreciably from current operation and maintenance activities. There would be no increase in traffic and no other changes that would occur during operation and maintenance compared to baseline. There would be no impact.

c. Would the project result in a change in air traffic patterns, including either an increase in traffic levels or a change in location that results in substantial safety risks?

Construction

NO IMPACT

Construction may require tall equipment such as cranes. New power line poles are expected to be between 60 and 110 feet tall, and a new microwave tower is expected to be between 80 and 100 feet tall. A crane to install these would not be tall enough to trigger FAA requirements (200 feet) and would not exceed the imaginary surface described in 14 CFR Part 77. The installation of two dishes at Fence Meadow Repeater Station would occur on an existing tower and would not change its height. There would be no impact to air traffic patterns.

Operation and Maintenance

NO IMPACT

New power line poles are expected to be between 60 and 110 feet tall, and a new microwave tower is expected to be between 80 and 100 feet tall. This would not trigger FAA noticing requirements and would not encroach on the imaginary surface described in 14 CFR Part 77. Furthermore, new poles and the microwave tower would be in close proximity to existing poles and would not be expected to pose a new safety hazard to air traffic. The height of the tower at the Fence Meadow Repeater Station would not change. There would be no impact.

d. Would the project substantially increase hazards due to a design feature (e.g., sharp curves or dangerous intersections) or incompatible uses (e.g., farm equipment)?

Construction

LESS THAN SIGNIFICANT WITH MITIGATION

The proposed project would not require the construction of publicly accessible roads that would have a substantially hazardous design feature such as sharp curves or dangerous intersections. No road design changes or incompatible uses would occur as a result of activities at Fence Meadow Repeater Station. Construction activities at and in the vicinity of the Sanger Substation could result in hazards due to incompatible uses with farm equipment that use existing access roads, and in other hazards due to access road design, traffic flow changes from site ingress and egress, work in public roadways, and road damage.

Access Roads and Driveways

Several types of access roads would be used for the proposed project:

- Two new access roads from South McCall Avenue;
- An internal roadway that would allow construction vehicles to turn around before exiting the site;
- Overland routes; and
- Existing access roads.

Access road locations are shown in Figure 4-3. Internal access roads include some existing farm access roads that are used by farm equipment. The use of narrow unpaved roadways during construction by construction equipment, vehicles, and farm equipment could cause a safety hazard. APM TRAN-1 requires adherence to practices in the Work Area Protection and Traffic Control Manual (California Joint Utility Traffic Control Committee 1999). However, APM TRAN-1 lacks sufficient detail in addressing hazards from incompatible uses to determine that it would reduce impacts to less than significant. Impacts would still be significant. MM TRAN-1 supersedes APM TRAN-1 and requires limiting speeds to 15 miles per hour (mph) and notification of farms, which would allow for avoidance of such hazards. Impacts due to incompatible uses would be less than significant with mitigation.

The two driveways leading onto South McCall Avenue may pose safety issues as large, slow trucks enter and exit the substation site into traffic approaching and leaving the intersection with East Jensen Avenue. This would be a significant impact due to a substantial increase in hazards. APM TRAN-1 requires adherence to practices in the Work Area Protection and Traffic Control Manual (California Joint Utility Traffic Control Committee 1999). However, APM TRAN-1 lacks sufficient detail about how PG&E would address hazards from slow trucks accessing the substation site. Impacts would still be significant. MM TRAN-1 would supersede APM TRAN-1 and require posting warning signs so that motorists can be

prepared for slow trucks. Impacts due to design features would be less than significant with implementation of MM TRAN-1.

Work in Public Roadways

Power line reconfiguration would require crossing South McCall and East Jensen Avenues. PG&E would install temporary guard structures or take other measures (e.g., temporary halting of traffic) along roadways to prevent conductor from falling onto motorists. Installation of guard structures would require temporary closure of the lane adjacent to the guard structure location. This could cause significant safety impacts to motorists. As part of APM TRAN-1, barriers and signage would be used to minimize hazards to vehicles. APM TRAN-1 requires adherence to practices in the Work Area Protection and Traffic Control Manual (California Joint Utility Traffic Control Committee 1999). However, APM TRAN-1 lacks sufficient detail to determine that it would reduce impacts to less than significant. Impacts would still be significant. MM TRAN-1 would supersede APM TRAN-1 and requires implementation of measures that would reduce lane closure hazards impacts to less than significant.

Oversize and Overweight Vehicles

Construction of the proposed project would require the use of overweight or oversized vehicles to deliver construction equipment and materials.

The applicant would obtain the necessary permits from Fresno County prior to beginning construction. Likewise, Caltrans has the discretionary authority to issue special permits for the movement of vehicles/ loads exceeding statutory limitations on the size, weight, and loading of vehicles traveling on state roads. Damage to roadways from heavy truck traffic and oversize and overweight vehicles concentrated on East Jensen Avenue and South McCall Avenue may result in hazardous conditions to motorists. APM TRAN-1 requires adherence to practices in the Work Area Protection and Traffic Control Manual (California Joint Utility Traffic Control Committee 1999). However, APM TRAN-1 does not address potential damage to roadways resulting from oversize and overweight vehicles. Impacts would still be significant. As part of MM TRAN-1, which would supersede APM TRAN-1, PG&E would repair road damage caused indirectly as a result of project vehicle traffic. Impacts would be less than significant with implementation of MM TRAN-1.

Operation and Maintenance

NO IMPACT

Project operation would not require construction of roads or driveways. Some slow trucks may exit from the substation site, but the volume of trucks would be negligible because the site would be unstaffed and operated remotely, and maintenance activities are expected to be generally the same as what is occurring at the existing Sanger Substation and Fence Meadow Repeater Station. Heavy truck traffic would be limited such that it would not cause acceleration in pavement degradation. There would be no safety impact.

e. Would the project result in inadequate emergency access?

Construction

LESS THAN SIGNIFICANT WITH MITIGATION

Construction of the substation and microwave tower and removal of existing substation equipment would take place within the existing disturbed area at the substation and within an area that is contained within the existing and expanded substation parcels. This work would not block emergency access. Power line

reconfiguration could require temporary, partial, or full closure of South McCall and East Jensen Avenues. Closure of lanes may significantly impact emergency access. APM TRAN-1 would require coordination with local emergency services providers so that the local emergency service providers can anticipate lane closures. Impacts would still be significant, however, because the APM requires notification to emergency services agency but does not require actions to maintain emergency access and does not specify timing for the notification to emergency service providers. MM TRAN-1 requires maintaining emergency access on roadways and to the substation site at all times. MM TRAN-1 would reduce impacts to less than significant.

All construction at the Fence Meadow Repeater Station would take place within the existing disturbed area at the station and would not block emergency access. There would be no impact at the repeater station.

Operation and Maintenance

NO IMPACT

The project would not result in the permanent closure of any roads or lanes, and no temporary road or lane closures are planned during operation. Maintenance activities occurring outside of the expanded substation site that would require disturbance of public roadways would be infrequent and comparable to current operation and maintenance activities. Maintenance activities at the Fence Meadow Repeater Station would not disturb or block public roadways. There would be no impact.

f. Would the project conflict with adopted policies, plans or programs regarding public transit, bicycle, or pedestrian facilities, or an otherwise decrease in the performance or safety of such facilities?

Construction

LESS THAN SIGNIFICANT WITH MITIGATION

Construction activities and construction traffic associated with the Sanger Substation expansion and power line reconfiguration would take place on roads that are also used by public transit and may be used by bicyclists (even though there are no bicycle routes located near the proposed project). Transit may be temporarily affected by construction activities, including utility pole installation and wire stringing or installation of fiber optics on East Jensen Avenue. No bus stops are located near the proposed project; however, lane closures may cause a minor delay to the Orange Cove Transit Line schedule if they occur while transit vehicles pass by the site. Any lane closures would not be expected to significantly impact the performance or safety of the transit service because they would be short in duration and there would be one through-lane at all times. There could be safety impacts to bicyclists traveling through the area when there are lane closures, which would be a significant impact. APM TRAN-1 requires adherence to practices in the Work Area Protection and Traffic Control Manual (California Joint Utility Traffic Control Committee 1999). However, the Work Area Protection and Traffic Control Manual would not provide specific details related to the proposed project (e.g., locations of lane closures, scheduling, notification, etc.); therefore, APM TRAN-1 lacks sufficient detail to determine that it would reduce impacts to less than significant. Impacts would still be significant. MM TRAN-1 would supersede APM TRAN-1. Implementation of MM TRAN-1 for lane closures would reduce safety impacts to less than significant.

No public transit facilities, pedestrian facilities, or bicycle facilities would be affected by construction activities at the Fence Meadow Repeater Station because all construction would take place within the existing area at the station. There would be no impact at the repeater station.

Operation and Maintenance

NO IMPACT

The proposed project would not result in any impacts to public transit, pedestrians, or bicyclists during operation. The project would not result in the permanent closure of any bus stops, sidewalks, or bicycle paths. Maintenance activities that would occur outside access roads or structure pads or require disturbance of public roadways would be infrequent, similar to current operation and maintenance, and would not result in significant safety or performance impacts.

g. Would the project result in inadequate parking that would result in a significant impact on the environment?

Construction

NO IMPACT

On-site vehicle parking for construction workers and construction equipment would be accommodated within parking and laydown areas for the proposed project. No public or on-street parking is located near the proposed project site. There would be no impact to parking that would result in an environmental impact.

Operation and Maintenance

NO IMPACT

The proposed project would have on-site parking and would require the same amount of parking as current operation and maintenance. Sufficient parking would be located at the expanded substation site and Fence Meadow Repeater Station site for periodic maintenance at the site. There would be no impact to parking that would result in an environmental impact.

5.17 Utilities and Service Systems

This section describes the environmental and regulatory setting and discusses impacts associated with the construction and operation of the Sanger Substation Expansion Project (proposed project) proposed by Pacific Gas and Electric Company (PG&E, or the applicant) with respect to utilities and service systems.

5.17.1 Environmental Setting

The proposed project would be part of PG&E's existing electrical system that serves the metropolitan area of Fresno County, California. The Sanger Substation expansion area, powerline reconfiguration, and microwave telecommunication tower work would be located within unincorporated Fresno County. The installation of microwave dish antennas at the Fence Meadows Communications Site would be located within the Sierra National Forest.

Water Supply

Sierra National Forest

Water in the Sierra National Forest comes directly from surface and groundwater in the Forest's 28 watersheds. Most is used off-Forest for irrigation in the San Joaquin Valley. Approximately 6,700 acre feet are used in the Forest annually. The most important uses of water are non-consumptive, including the generation of electricity through hydropower (USFS 1991).

Fresno County

Water in Fresno County is supplied through complex systems of local groundwater and surface water management and delivery. Water supply is managed by a combination of public and private water agencies, including the United States Department of the Interior Bureau of Reclamation, cities, water and flood control districts, local irrigation districts, and utility companies. The 15 incorporated cities within Fresno County have municipal water systems, and approximately 370 entities provide domestic water in the unincorporated county (Fresno County 2000a). Private wells are used to pump groundwater in rural parts of Fresno County. The Consolidated Irrigation District provides irrigation water to the majority of the agricultural lands in the proposed project vicinity (Provost and Pritchard Engineering Group, Inc. 2010). The only surface water feature in the project vicinity is a bermed agricultural ditch that adjoins the private road north of the Sanger Substation expansion area (Provost and Pritchard Engineering Group, Inc. 2010). Currently, row crops that are planted in the proposed substation expansion area require 18.2 acre-feet (5.9 million gallons) of water per year of irrigation from an on-site groundwater well; this water demand would cease prior to the onset of proposed project construction.

City of Sanger

Water required for construction of the proposed project may be supplied by the City of Sanger. Groundwater is the sole source of water supply for the City of Sanger. Currently, there is no limit to the quantity of water that the City of Sanger may extract (Mulligan 2016). As cited in the 2005 Urban Water Management Plan, the City of Sanger is capable of producing 14,458 acre-feet (4.7 billion gallons) of water per year from eight wells. Due to mechanical issues and calcification of well casings, actual capacity may be slightly less (Mulligan 2016). Current demand is 5,364 acre-feet (1.7 billion gallons) of water per year (City of Sanger 2016a).

City of Fowler

Water required for construction of the proposed project may be supplied by the City of Fowler. Groundwater is the sole water supply for the City of Fowler and the city has six active wells and one on

standby with the state. Currently, there is no limit to the quantity of water that the City of Fowler may extract, and the maximum daily production is approximately 3.1 billion gallons per year (Weisser 2016a). In 2015, the city pumped 1,692 acre-feet (551,500 million gallons) of water and 2,011 acre-feet (655,400 million gallons) in the previous year (Weisser 2016b).

Sunnyside Farms

Current water use at the expanded substation site (currently Sunnyside Farms) is for row crops, which use about 2.6 acre-feet per acre per year. With about 7 acres in the expansion area, use across the expansion area is about 18.2 acre-feet per year. Water is obtained from a groundwater well at the site (PG&E 2015).

Wastewater

All incorporated cities within Fresno County are served by local sewage collection and treatment systems. Fresno County owns and operates 11 wastewater treatment facilities on behalf of water works districts and county service areas. Rural areas that are not served by centralized wastewater systems typically rely on individual septic systems for wastewater treatment and disposal. Accumulated solids pumped from the proposed project site may be disposed of at the Fresno-Clovis Regional Wastewater Reclamation Facility. The Fresno-Clovis Regional Wastewater Reclamation Facility's capacity is 80 million gallons per day, and currently, on average, the Facility receives 68 million gallons of wastewater per day (City of Sanger 2016b).

Stormwater

The proposed project area is located in a level agricultural field 5 miles west of the Kings River. The proposed project area is not served by an existing stormwater drainage system. Rainwater runoff from the existing Sanger Substation percolates into the soil or drains to nearby roadside ditches. There is also a retention pond at the existing substation site, which may collect rainwater and runoff from the substation area during heavy rain events.

Solid Waste Disposal

Waste Management, Inc., located at 4333 E. Jefferson Avenue in Fresno, California, provides solid waste collection and recyclable material processing services to the proposed project area (Waste Management, Inc. 2016). Table 5.17-1 provides details about the two closest landfills to the project area.

Table 5.17-1 Landfills Serving the Project Area

Landfill	Maximum Throughput (Tons/Day)	Maximum Permitted Capacity (Cubic Yards)	Remaining Capacity Cubic Yards/ Date	Expected Closing Date	Location	Wastes Accepted
City of Clovis Landfill	2,000	7,800,000	7,740,000 / August 01, 2012	2047	15.3 miles northwest of substation expansion area.	Industrial and municipal waste
American Avenue Disposal Site	2,200	32,700,000	29,358,535 /July 29, 2005	2031	29.2 miles southwest of substation expansion area.	Agricultural, asbestos, construction/ demolition, industrial, mixed municipal, and tires; treated wood waste

Source: CalRecycle 2016a, 2016b.

The Fresno County Resources Division is responsible for developing, implementing, and administering a range of county-wide solid waste management programs, including the County's Business Waste Assessment Program and Recycling Market Development Zone Program (Fresno County 2016).

Electricity and Natural Gas

Electrical power and natural gas service in Fresno County is provided by PG&E. The existing Sanger Substation is a part of the Central Valley 115-kilovolt transmission system that supplies hydro- and natural-gas-generated electricity to other substations in the region.

5.17.2 Regulatory Setting

Federal

The Sierra National Forest's Land and Resource Management Plan (LRMP) contains goals and management direction which enable the U.S. Forest Service (USFS) to manage the Forest for a mix of activities, allow use and protection of resources, fulfill its legislative requirements and address Regional and National issues. The LRMP does not contain regulations applicable to the project related to utilities and service systems in the Sierra National Forest.

State

Integrated Waste Management Act

The Integrated Waste Management Act of 1989 (Assembly Bill 939) requires cities and counties to reduce, by 50 percent, the amount of solid waste disposed of in landfills by the year 2000 and beyond. The Waste Management Plan and Waste Log required as part of the Fresno County's Construction and Demolition Debris Recycling Program are designed to assist with the county's compliance with the state mandate and provide builders with a means of documenting the waste reduction requirements included in the California Green Building Standards Code (Fresno County 2016). The California Department of Resources Recycling and Recovery (CalRecycle) reports that in 2006 unincorporated Fresno County's Biennial Review Status for solid waste diversion was "Compliance Fulfilled," indicating that the county's compliance schedule has been fulfilled. CalRecycle has not approved a diversion rate for the county due to inaccurate base year data or other issues (CalRecycle 2006).[1]

Local

County of Fresno Water Conservation Ordinance

The 2014 County of Fresno Water Conservation Ordinance (Chapter 14.01 "Water Conservation") establishes regulations for the conservation of water under specific stages of water conservation severity including Normal Water Conservation, Water Conservation Stage Two (Significant Water Shortage Emergency Condition), Water Conservation Stage Three (Critical Water Shortage Emergency Condition), and Water Conservation Stage Four (Severe Water Shortage Emergency Condition). Regulations include:

- Restricted and under some conditions prohibits watering lawns, ground cover, and landscaping.
- Requires that sprinklers must be adjusted to not allow any water to flow into any street.

[1] Beginning with reporting year 2007 jurisdiction annual reports, diversion rates are no longer determined and reported by CalRecycle (CalRecycle 2012).

- Construction operations receiving water supplied by the County shall not use water for any purpose other than those required by the regulatory agency.
- Restricted and regulated washing of vehicles and mobile equipment (Fresno County 2014).

County of Fresno General Plan

The Fresno County General Plan contains several policies and implementation programs relating to water supply and water use, wastewater collection, treatment, and disposal, and landfills, transfer stations, and solid waste processing facilities. Specifically, the following goals are relevant to the proposed project:

- ***Goal PF-C:*** *To ensure the availability of an adequate and safe water supply for domestic and agricultural consumption*
- ***Goal PF-D:*** *To ensure adequate wastewater collection and treatment and the safe disposal of wastewater*
- ***Goal PF-F:*** *To ensure the safe and efficient disposal or recycling of solid waste generated in the county in an effort to protect the public health and safety (Fresno County 2000b).*

5.17.3 Environmental Impacts and Assessment

Applicant Proposed Measures

The applicant has not incorporated applicant proposed measures into the proposed project to specifically minimize or avoid impacts on public utilities and service systems. A list of all project APMs is included in Table 4-5.

Impacts on Utilities and Service Systems

Table 5.17-2 includes the significance criteria from Appendix G of the California Environmental Quality Act Guidelines' utilities and services section to evaluate the environmental impacts of the proposed project.

Table 5.17-2 Utilities and Service Systems Checklist

Would the project:	Potentially Significant Impact	Less Than Significant with Mitigation Incorporation	Less Than Significant Impact	No Impact
a. Exceed wastewater treatment requirements of the applicable Regional Water Quality Control Board?	☐	☐	☒	☐
b. Require or result in the construction of new water or wastewater treatment facilities or expansion of existing facilities, the construction of which could cause significant environmental effects?	☐	☐	☐	☒
c. Require or result in the construction of new storm water drainage facilities or expansion of existing facilities, the construction of which could cause significant environmental effects?	☐	☐	☒	☐
d. Have sufficient water supplies available to serve the project from existing entitlements and resources, or are new or expanded entitlements needed?	☐	☐	☒	☐

Table 5.17-2 Utilities and Service Systems Checklist

Would the project:	Potentially Significant Impact	Less Than Significant with Mitigation Incorporation	Less Than Significant Impact	No Impact
e. Result in a determination by the wastewater treatment provider which serves or may serve the project that it has adequate capacity to serve the project's projected demand in addition to the provider's existing commitments?	☐	☐	☒	☐
f. Be served by a landfill with sufficient permitted capacity to accommodate the project's solid waste disposal needs?	☐	☐	☒	☐
g. Comply with federal, state, and local statutes and regulations related to solid waste?	☐	☐	☐	☒

a. Would the project exceed wastewater treatment requirements of the applicable Regional Water Quality Control Board?

Construction

LESS THAN SIGNIFICANT IMPACT

Substation project construction activities would generate minimal wastewater during the 24- to 30-month construction period. Construction activities at the Fence Meadow Repeater Station would also generate minimal wastewater during the approximately one-week construction period. Construction crews would use portable toilets during construction activities, which would generate a small amount of wastewater. Given that construction workers would be from the local area, there would be negligible, if any, net change in wastewater generated and treated in the area due to the proposed project. The small amount of wastewater generated would be pumped by qualified contractors and disposed of in accordance with applicable regulations and codes. Although construction of the proposed project would generate wastewater, construction of the proposed project would not exceed wastewater treatment requirements of the Central Valley Regional Water Quality Control Board. Impacts would be less than significant.

Operation and Maintenance

NO IMPACT

Operation of the expanded Sanger Substation, reconfigured power lines, and microwave dish antennas would not result in any new wastewater generation. The proposed project would not exceed wastewater treatment requirements established by the Central Valley Regional Water Quality Control Board. Operations and maintenance activities would be similar to current activities. There would be no impact during operation and maintenance.

b. Would the project require or result in the construction of new water or wastewater treatment facilities or expansion of existing facilities, the construction of which could cause significant environmental effects?

Construction

NO IMPACT

Substation project construction activities would generate minimal wastewater during the 24- to 30-month construction period. Construction activities at the Fence Meadow Repeater Station would also generate

minimal wastewater during the approximately one-week construction period. Construction crews would use portable toilets during construction activities, which would generate a small amount of wastewater. Given that construction workers would be from the local area, there would be negligible, if any, net change in wastewater generated and treated in the area. The small amount of wastewater generated would be pumped by qualified contractors and disposed of at existing facilities. No construction of new water or wastewater treatment facilities or expansion of existing facilities would be required. There would be no impact.

Operation and Maintenance

NO IMPACT

Operation of the expanded Sanger Substation, reconfigured power lines and microwave dish antennas would not result in any new wastewater generation. Operations and maintenance activities would be similar to current activities. Operation of the proposed project would not therefore result in construction of new water or wastewater treatment facilities or expansion of existing facilities. There would be no impact during operation and maintenance.

c. Would the project require or result in the construction of new storm water drainage facilities or expansion of existing facilities, the construction of which could cause significant environmental effects?

Construction

LESS THAN SIGNIFICANT IMPACT

PG&E would construct a stormwater detention basin on the expanded substation site. Runoff would drain from the substation site into the stormwater retention basin and then would filter through soils or would evaporate. The new basin would be designed to have capacity to handle all runoff from the expanded substation pad. Impacts from construction of the detention basin, such as sedimentation, are included and fully addressed by resource area within this IS/MND. Stormwater drainage from the proposed project site would be fully contained and percolated into the ground on site; therefore, stormwater would not be connected to or exceed the capacity of the existing, local storm drainage system, and no construction or alteration of stormwater facilities would be required. Impacts would be less than significant with mitigation, as addressed in other resource sections of this IS/MND.

There would be no change to storm water drainage facilities and therefore no impact related to new or expanded storm water drainage facilities at the Fence Meadow Repeater Station site.

Operation and Maintenance

NO IMPACT

Operation and maintenance of the proposed project would not require construction or alteration of stormwater drainage facilities beyond the onsite stormwater retention basin being constructed as part of the proposed project at the substation site. During operation, the stormwater retention basin would reduce impacts associated with stormwater such that no additional facilities would be needed. No facilities would be constructed at the Fence Meadow Repeater Station site. Therefore, there would be no impact.

d. Would the project have sufficient water supplies available to serve the project from existing entitlements and resources, or are new or expanded entitlements needed?

Construction

LESS THAN SIGNIFICANT IMPACT

During the 24- to 30-month substation construction period, a total of approximately 1 million gallons of water would be used for dust suppression, compaction, concrete work, and fire protection services on the construction site. Potable water would also be brought on site for the 30-person construction crew's consumption. All water would be trucked in from outside sources in the project vicinity. PG&E anticipates that the water required for expansion of the substation would be purchased from the City of Sanger or the City of Fowler through hydrant meters. Water may also be purchased through a water use agreement from Sunnyside Farms, the current landowner of the substation expansion area. The City of Sanger is capable of producing 4.7 billion gallons of water per year from eight wells and the current demand is 1.7 billion gallons of water per year (City of Sanger 2016a). The City of Fowler is capable of producing approximately 3.1 billion gallons of water per year and pumped 551,500 million gallons of water in 2015 (Weisser 2016b). As previously stated, neither the City of Sanger nor the City of Fowler have a limit to the amount of water they may pump, and given the proposed project's temporary water needs of approximately 1 million gallons of water during construction, the proposed project would not exceed the supply of these providers. Sunnyside Farms would also have sufficient existing water entitlements and resources. Given that current demand is 5.9 million gallons per year on the expansion area for row crops, and the proposed projects' need is 1 million gallons over 24 to 30 months, there would be a decrease in water need at the substation expansion parcel if Sunnyside Farms water supply is used. For work at the Fence Meadow Repeater Station, there would be no ground disturbance and therefore no dust suppression water needs. No other water would be needed for construction at the repeater station. The construction crews would likely bring potable water to the site. For the one-week long construction period at Fence Meadow Repeater Station, negligible potable water would be used. Impacts related to water supply entitlements and resources would be less than significant.

Operation and Maintenance

NO IMPACT

Operation and maintenance of the expanded substation would not require water. Furthermore, the current water demands for the irrigation of eggplant crops that are planted in the proposed substation expansion area would cease prior to the onset of construction, resulting in a net reduction of 5.9 million gallons of water per year at the project site. There would be no adverse impact during operation and maintenance of the proposed project.

e. Would the project result in a determination by the wastewater treatment provider which serves or may serve the project that it has adequate capacity to serve the project's projected demand in addition to the provider's existing commitments?

Construction

LESS THAN SIGNIFICANT IMPACT

Project construction activities would generate minimal wastewater during the 24- to 30-month construction period. Construction crews would use portable toilets during construction activities, which would generate a small amount of wastewater. Given that construction workers would be from the local area, there would be negligible if any net change in wastewater generated and treated in the area. The

small amount of wastewater generated would be pumped by qualified contractors and disposed of at existing facilities. There would be a less than significant impact.

Operation and Maintenance

NO IMPACT

Operation of the expanded Sanger Substation, reconfigured power lines, and antenna system would not result in any new wastewater generation. Operations and maintenance activities would be similar to existing activities. Operation of the proposed project would therefore not result in construction of new water or wastewater treatment facilities or expansion of existing facilities. There would be no impact during operation and maintenance.

f. Would the project be served by a landfill with sufficient permitted capacity to accommodate the project's solid waste disposal needs?

Construction

LESS THAN SIGNIFICANT

Project activities that would generate solid waste include demolition and removal of the existing Sanger Substation and wood poles, installation of new tubular steel poles, and installation of the telecommunications lines. Solid waste would include vegetation, rock, scrap wood and metal, materials removed from the existing transmission lines and poles, excavated soil, and other construction debris, and trash in general. Vegetative debris removed during construction would be chipped and mulched on site and reused during post-construction restoration activities. Construction and demolition waste materials, such as towers, poles and conductors, would be recycled to the maximum extent practical. The wood poles that would be removed during construction would be salvaged for reuse by PG&E, recycled, or disposed of in a Class I hazardous waste landfill (American Avenue Disposal Site) that is licensed to receive treated wood poles. Project construction would be served by landfills in the area (refer to Table 5.17-3). The American Avenue Disposal Site has an approximate available capacity of 29,000,000 cubic yards and is intended to operate until 2031, which indicates it has more than sufficient capacity to accommodate the proposed project's treated wood poles and other solid waste disposal needs. Impacts would be less than significant.

Operation and Maintenance

NO IMPACT

Solid waste generated during project operation and maintenance would include replaced parts and equipment, vegetation materials cleared during routine maintenance, and minimal domestic trash (e.g., glass, paper, plastic, packing materials, etc.) from maintenance workers, which would be removed and taken off site for disposal. These are the same types of wastes that are currently generated by operation and maintenance of the substation and existing power lines, and it is reasonable to expect they would be generated in similar quantities as current operation and maintenance. There would be no impact.

g. Would the project comply with federal, state, and local statutes and regulations related to solid waste?

Construction

NO IMPACT

The proposed project would generate a negligible amount of solid waste during construction, of which materials would be recycled whenever practicable. The proposed project would have to comply with the California Integrated Waste Management Act of 1989 (Assembly Bill 939), which requires local jurisdictions in California to reduce, by 50 percent, the amount of solid waste disposed of in landfills by the year 2000 and beyond. During project construction and operation, the applicant would dispose of all waste in accordance with published federal, state, or local standards relating to solid waste; therefore, no impact would occur under this criterion.

Operation and Maintenance

NO IMPACT

Solid waste generated during project operation and maintenance would include replaced parts and equipment, vegetation materials cleared during routine maintenance, and minimal domestic trash (e.g., glass, paper, plastic, packing materials, etc.) from maintenance workers, which would be removed and taken off site for disposal. These are the same types of wastes that are currently generated by operation and maintenance of the substation and existing power lines. Waste would be disposed of according to applicable regulations. There would be no impact.

This page intentionally left blank.

5.18 Mandatory Findings of Significance

5.18.1 Environmental Impacts and Assessment

This section discusses mandatory findings of significance, as well as potential cumulative and growth-inducing impacts, related to the Sanger Substation Expansion Project (proposed project) proposed by Pacific Gas and Electric Company (PG&E, or the applicant). California Environmental Quality Act (CEQA) Guidelines Section 15065 requires that the lead agency determine whether the proposed project would have a significant effect on the environment. Table 5.18-1 contains the criteria for making the determination.

Table 5.18-1 Mandatory Findings of Significance Criteria

		Potentially Significant Impact	Less Than Significant with Mitigation Incorporation	Less Than Significant Impact	No Impact
a.	Does the project have the potential to substantially degrade the quality of the environment, substantially reduce the habitat of a fish or wildlife species, cause a fish or wildlife population to drop below self-sustaining levels, threaten to eliminate a plant or animal community, substantially reduce the number or restrict the range of a rare or endangered plant or animal or eliminate important examples of the major periods of California history or prehistory?	☐	☒	☐	☐
b.	Does the project have impacts that are individually limited, but cumulatively considerable? ("Cumulatively considerable" means that the incremental effects of a project are considerable when viewed in connection with the effects of past projects, the effects of other current projects, and the effects of probable future projects)?	☐	☒	☐	☐
c.	Does the project have environmental effects which will cause substantial adverse effects on human beings, either directly or indirectly?	☐	☐	☒	☐

a. Does the project have the potential to degrade the quality of the environment, substantially reduce the habitat of a fish or wildlife population to drop below self-sustaining levels, threaten to eliminate a plant or animal community, reduce the number or restrict the range of a rare or endangered plant or animal or eliminate important examples of the major periods of California history or prehistory?

Biological Resources

Areas impacted by construction and operation of the proposed project provide minimal foraging habitat for some special status bird species; abundant foraging habitat would still be available surrounding the project area and within range of such species. The proposed project therefore would not degrade environmental quality through habitat modification or substantially reduce the habitat of a fish or wildlife population to drop below self-sustaining levels.

The proposed project area is heavily modified agricultural land with no native plant species. Plants in the project area consist mainly of seasonal agricultural crops. The proposed project would not threaten to

eliminate a plant community. The area provides marginal foraging habitat for some general wildlife and potentially for some special status species; there is abundant similar land adjacent to the project area and in the immediate vicinity of the project area. The proposed project would not threaten to eliminate an animal community.

No special status plant species have been located on site or have the potential to be found on site. The proposed project would not reduce the number or restrict the range of any rare or endangered plant species.

There is a moderate potential for Swainson's hawk *(Buteo swainsoni)* to occur in the project area. There is low potential for burrowing owl *(Athene cunicularia)*, loggerhead shrike (*Lanius ludovicanus*), San Joaquin kit fox *(Vulpes macrotis mutica)*, and white-tailed kite (*Elanus leucurus*) to occur in the project area. Observations of pallid bat (*Antrozous pallidus*) and western red bat (*Lasiurus blossevillii*) have not been reported within a 10-mile radius of the project area. As discussed in greater detail in Section 5.4, "Biological Resources," the applicant would implement Applicant Proposed Measures (APMs) as part of the proposed project; however, not all APMs were applied to reduce impacts. APM BIO-9 and APM BIO-11 were applied to reduce impacts to biological resources. APM BIO-9 would prohibit pets and firearms in the project area. APM BIO-11 would require inspection of excavation sites prior to backfilling and placement of structures.

Impacts to all species would remain significant even with these APMs. The applicant would be required to implement several mitigation measures as well, including Mitigation Measure (MM) BIO-1, which would ensure that all construction personnel are aware of the special status species in the area and the project commitments to reduce impacts; MM BIO-2, which would ensure that preconstruction surveys for special status species are performed prior to construction; MM BIO-3, which would ensure that special status species in the project vicinity are monitored to reduce disturbance by project activities to the fullest extent possible; MM BIO-4, which would ensure that a qualified avian biologist identifies any active nests prior to construction and would implement the appropriate nest buffers; MM BIO-5, which would reduce harassment and potential vehicle strikes of wildlife; MM BIO-6, which provides specific protocols for burrowing owl surveys; and MM BIO-7, which would describe protocols for Swainson's hawk specifically. With mitigation, the proposed project would not reduce the number or restrict the range of any rare or endangered animal species. There are no known native wildlife nursery sites or migratory routes for any native resident or migratory fish or wildlife species in the project area. The proposed project would not fragment any wildlife habitat. The impacts would be less than significant after implementing the above-stated mitigation measures and APMs.

Cultural Resources

The proposed project would not eliminate important examples of major periods of California history or prehistory. There are no known resources in the project area that would qualify as important historical examples of this type. Though it is unlikely that such a resource would be discovered during excavation, there is potential for discovery. Damage to such a resource would be a significant impact. As discussed in greater detail in Section 5.5, "Cultural Resources," PG&E has proposed APM CUL-1 and CUL-3, respectively, to train workers on cultural resources in general and to outline the process to follow in the event that a cultural resource is discovered. Impacts would still be significant after implementation of these APMs. The applicant would be required to implement several mitigation measures, including MM CUL-1, which would supersede APM CUL-3 and require preparation of a Cultural Monitoring and Treatment Plan that has procedures for unanticipated discovery of resources, and MM CUL-2, which would supersede APM CUL-1 and would in part require training workers on cultural resources that may be encountered at the site. The proposed project would not eliminate important examples of major periods of California history or prehistory after implementation of mitigation. With the implementation of MM CUL-1 and MM CUL-2, impacts under this criterion would be less than significant.

b. Does the project have impacts that are individually limited, but cumulatively considerable?

Cumulative Impacts

A cumulative impact is when "two or more individual effects which, when considered together, are considerable or which compound or increase other environmental impacts" (CEQA Guidelines section 15355).

Cumulative Scenario

In discussing cumulative impacts, the CEQA Guidelines outline two approaches for characterizing projects that may occur in the vicinity of a proposed project:

1. **Project list:** A list of past, present, and probable future projects producing related or cumulative impacts, including, if necessary, projects outside the control of the agency (CEQA Guidelines section 15130(b)(1)(A)).
2. **Summary of projections:** A summary of projections contained in an adopted local, regional or statewide plan, or related planning document, that describes or evaluates conditions contributing to the cumulative effect (CEQA Guidelines section 15130(b)(1)(B)). This summary can be supplemented with additional information, including a regional modeling program.

This document uses both approaches, depending on which is more appropriate for the resource area being analyzed. The approach selected depends on the resource area and the nature and character of expected impacts. The rationale for selecting an approach is provided in the cumulative impacts discussion for each resource area.

Projects Considered

Table 5.18-2 includes a list of projects considered in the cumulative impacts analysis. The list in Table 5.18-2 was compiled by contacting local and state agencies regarding planned projects and projects currently under construction. PG&E was also queried to determine if they had any planned projects near the proposed project. The following agencies were queried:

- Fresno County
- City of Sanger
- U.S. Forest Service, Sierra National Forest
- California Department of Transportation (Caltrans)
- Federal Energy Regulatory Commission (FERC)

No Caltrans, FERC, U.S. Forest Service, or PG&E projects were identified for inclusion in the cumulative impacts analysis in this section. No projects were identified in the vicinity of the Fence Meadow Repeater Station; therefore, the antenna system component at the Fence Meadow Repeater Station was not evaluated for cumulative impacts in this section. Generally, projects within 5 miles were evaluated for inclusion in the cumulative impacts analysis. Projects carried forward for analysis in this section had to be probable future projects with impacts that would combine with impacts of the proposed project.

Table 5.18-2 Cumulative Project List

No.	Project Name	Project Description	Location and Distance from Existing Sanger Substation	Status
1	Royal Woods Subdivision - Phase 3	This subdivision includes the construction of 187 homes. The project also includes various improvements such as sidewalks, drainage facilities, water mains, utilities, and landscaping. The site is located on about 50 acres.	Northeast of intersection of East Jensen Avenue and South Indianola Avenue; 1.5 miles east of existing Sanger Substation	Under construction; as of October 2015, 74 lots had been completed. Phase 3 will include construction of 93 additional homes and will be completed by February 2017.
2	Agricultural Commercial Center (Fresno County CUP Application No. 3349)	This commercial center would include a gas station and market. The site would be located on about 1.8 acres.	Southeast of intersection of State Route 180 and McCall Avenue; 1.9 miles north of existing Sanger Substation	Approved: The project was approved in April 2014. There was no construction on the site as of March 2015. Construction schedule is unknown.
3	Vita Pakt Citrus Products Company Commercial Dehydrator Facility Expansion (Fresno County CUP Application No. 3497)	This project would involve almost 28,000 square feet of new buildings on about 4.4 acres for fruit and vegetable processing. The new building would replace about 31,000 square feet of existing facilities.	8898 East Central Avenue in Del Rey, California; 2.1 miles southwest of existing Sanger Substation	Approved. The project was approved in August 2015.
4	Rezone of AE20 to C2, and General Plan Amendment	This project would involve a general plan amendment and rezoning of 5.22 acres from agricultural use to commercial use for a community shopping center. Future uses could include retail, office, and public facilities.	East of North McCall Avenue, about 420 feet north of intersection with State Route 180; 2.0 miles north of existing Sanger Substation	Approved. The amendment was approved in 2014. There was no construction on the site as of March 2015. No known application for construction has been submitted.

Sources: Sheppard 2015; City of Sanger 2016b; Fresno County 2014a; PG&E 2015; Motta pers. comm. 2015; Fresno County 2014b; Google Earth 2015; Fresno County 2014c

The projects located near the proposed project were evaluated to determine whether they would contribute to a cumulatively significant impact and whether the proposed project would make a cumulatively considerable contribution to that significant cumulative impact. The locations of the cumulative projects are shown on Figure 5.18-1.

Not all projects are considered part of the cumulative scenario for all impacts. The potential for cumulative impacts on a given resource is in part dictated by geographic scope. For example, cumulative noise and vibration impacts are highly localized because both attenuate over distance. For each resource category, a geographic scope is given and applied to limit the list of projects considered in the cumulative impact analysis.

Cumulative Impacts

Resources with No Impacts

The proposed project would have no impact and would therefore not contribute to a cumulative impact on the following resources:

- Land Use and Planning
- Mineral Resources
- Public Services

These resource areas are therefore not discussed in this section.

Aesthetics

Aesthetic and visual resource impacts are project-specific and highly localized; therefore, the list approach was used to evaluate potential cumulative impacts. The geographic scope of cumulative impacts on aesthetics includes all areas where more than one project would be visible with the proposed project in the same public view. None of the cumulative projects are located within the same public view as the proposed project because all projects are at least 1.5 miles away from the proposed project across relatively flat land. Therefore, there would be no cumulatively significant impact.

Agriculture and Forestry Resources

The projections approach is used for agriculture and forestry resources, since these resources are in general managed at a regional level. The geographic scope of cumulative impacts on agriculture resources includes the entirety of Fresno County because agricultural resources are typically managed at the county level. Cumulative impacts for agriculture resources include lands designated as Prime Farmland and Farmland of Statewide Importance in Fresno County. The County of Fresno contains over 678,000 acres of Prime Farmland and over 404,000 acres of Farmland of Statewide Importance (CDC 2014).

The proposed project would not impact forestry resources (significance criteria (c) and (d)) and therefore would not contribute to a cumulative impact for these resources. The proposed project would not involve other changes that would result in conversion of forest land to non-forest use (significance criterion (e)) and therefore would not contribute to a cumulative impact for these resources. The proposed project would not conflict with a Williamson Act contract or agricultural zoning and therefore would not contribute to a cumulative impact (significance criterion (b)). Furthermore, no countywide impacts involving other activities that would result in conversion of agricultural land to non-agricultural use have been identified in the Fresno County General Plan; therefore, the proposed project would not contribute to a cumulative significant impact (significance criterion (e)). Significance criteria (b), (c), (d), and (e) are therefore not further discussed.

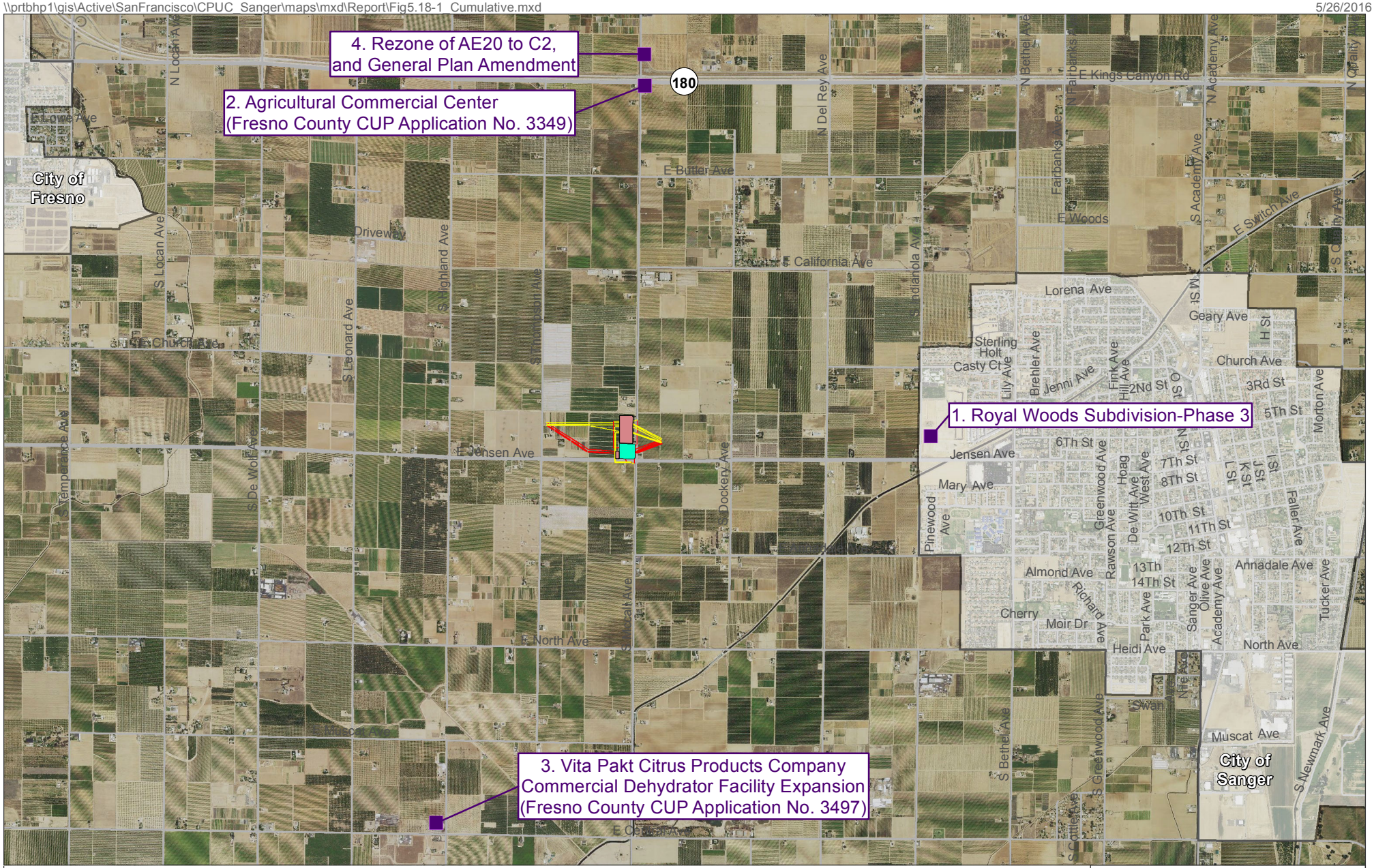

- Cumulative Project
- Existing Line to be Removed
- New Line Installed
- Proposed Substation Expansion Footprint
- Existing Substation Footprint

0 0.25 0.5 1 Miles

Sources: PG&E 2015, ESRI 2012
Basemap: NAIP 2014

Figure 5.18-1
Locations of Cumulative Projects
Sanger Substation
Fresno County, CA

Construction and Operation and Maintenance

Construction of the proposed project would temporarily impact 21.84 acres of Farmland. Of this, 14.94 acres of Prime Farmland and 6.9 acres of Farmland of Statewide Importance would be disturbed. The proposed project would permanently disturb and convert 7.15 acres of land to non-agricultural use; 7.09 acres are designated as Prime Farmland, and 0.05 acres are designated as Farmland of Statewide Importance. The Fresno County General Plan Environmental Impact Report (EIR) states that, under the General Plan, up to 37,373 acres of prime and/or important farmland would be converted to urban land uses to the year 2020. Similarly, the loss of agricultural production is identified as a significant and unavoidable impact (Fresno County 2000). This represents a significant cumulative agricultural impact, and the proposed project would contribute to the significant cumulative impact through conversion of Farmland during construction and operation. However, the proposed project's contribution to the significant cumulative impact would not be cumulatively considerable. For mitigation of direct conversion impacts, the Fresno County General Plan EIR indicates policies related to:

- Residential development on agricultural land
- Minimum parcel size in agricultural areas
- Preference of siting uses in urban areas
- Directing urban growth away from agricultural areas
- Avoiding encroachment of and conflicts with incompatible land uses. (Fresno County 2000)

Mitigation listed in the General Plan EIR indicates that projects related to electric conveyance are not a key impetus for agricultural land conversion. Furthermore, substations are listed in the General Plan policies as an allowed use under certain conditions (Policy LU-A.3); Sanger Substation is an existing use, so the proposed project would be part of an already allowed use at the site consistent with the General Plan. Given that the proposed project is not of the type that is chiefly responsible for agricultural land conversion as indicated by General Plan Policies, and given the small acres temporarily and permanently converted to non-agricultural use by the proposed project, the proposed project would not make a cumulatively considerable contribution to agricultural land conversion (significance criterion (a)).

Air Quality

The list approach was used to determine localized air quality impacts, such as odor and exposure of sensitive receptors to substantial air pollutants. The geographic extent for exposure of receptors to substantial pollutant concentrations is 1,000 feet due to eventual dispersion of most diesel particulate matter at that distance from concentration of trucks (CARB 2005). There are no projects within 1,000 feet of Sanger Substation; therefore, the proposed project would not contribute to a cumulative exposure impact to sensitive receptors (significance criterion (d)). The geographic extent for odor impacts is 36 feet, given that is the maximum distance at which perception of diesel exhaust emissions can be perceived (Colucci and Barnes 1970). There are no projects within 36 feet of the substation sites; therefore, the proposed project would not contribute to a cumulative odor impact (significance criterion (e)). Significance criteria (d) and (e) are not further discussed.

To characterize basin-wide impacts, this analysis used a comparison to significance thresholds adopted by the San Joaquin Valley Air Pollution Control District (SJVAPCD), per the projections approach. The SJVAPCD has adopted several attainment plans that outline the long-term strategies designed to achieve compliance with National Ambient Air Quality Standards and California Ambient Air Quality Standards. According to the SJVAPCD (2015 par. 7.12, page 65), "projects with emissions below the thresholds of significance for criteria pollutants would be determined to 'Not conflict or obstruct implementation of the District's air quality plan.'"

Construction

Air quality emissions would be below significance thresholds for all criteria pollutants, as described in Section 5.3, "Air Quality," for significance criteria (a), (b), and (c). Construction of the proposed project therefore would not make a cumulatively considerable contribution to any significant air quality impact at the basin level (significance criteria (a), (b), and (c)).

Operation and Maintenance

There would be no increase in criteria pollutant emissions during operation and maintenance, as future operation and maintenance activities would be comparable to the existing activities, and the proposed project would be unstaffed, with no new permanent employees. Therefore, the proposed project would not contribute to a cumulative air quality impact (significance criteria (a), (b), and (c)) during operation and maintenance.

Biological Resources

The list approach was used for the biological resources cumulative analysis. The habitat in the surrounding area is highly homogenous, and the project area is limited in reach such that impacts are expected to be somewhat localized. The geographic scope of cumulative impacts on biological resources is 2 miles due to the largely homogenous agricultural surroundings. Therefore, there is abundant similar agricultural habitat in the vicinity. Furthermore, the impacts of the proposed project are minimal and not expected to result in impacts to sufficient wildlife individuals to have widespread effects. The Royal Woods Subdivision, an agricultural market project, and rezoning projects are located within 2 miles of the proposed project.

The proposed project would not impact any riparian habitat or sensitive natural communities; it would not contribute to a cumulative impact to sensitive natural communities (significance criterion (b)). The proposed project would not impact any federally or state projected wetlands; it would therefore not contribute a cumulative impact to wetlands (significance criterion (c)). The proposed project would not interfere with wildlife movement or migration; it would therefore not contribute to a cumulative impact to wildlife movement or migration (significance criterion (d)). The proposed project would not conflict with local biological resources protection policies or the provisions of an adopted Habitat Conservation Plan, Natural Community Conservation Plan, or other such plan; it would therefore not contribute to any cumulative impact related to conflict with a biological resources protection plan (significance criteria (e) and (f)). Significance criteria (b), (c), (d), (e), and (f) are therefore not further discussed.

Construction

There is a moderate potential for one special status species— Swainson's hawk—to occur in the area, and low potential for burrowing owl, loggerhead shrike, pallid bat, San Joaquin kit fox, western red bat, and white-tailed kite. Land impacted by the proposed project is primarily agricultural. Nearly half of Fresno County's land is involved in agricultural operations (Fresno County Farm Bureau n.d.), and the majority of land within 2 miles of Sanger Substation is agricultural land. As a result, potential habitat for the special status species in the project area is representative of potential habitat near and at the site of the proposed project. The Royal Woods Subdivision project has already been graded, and the agricultural market project site is already disturbed (Google Earth 2015). The rezoning project area currently contains vineyards (Google Earth 2015). This means there is little to no habitat at the cumulative project sites for special status species, though the sites may be used for foraging by the same species and individuals as the proposed project site. Royal Woods Subdivision, the agricultural market project, and the eventual development on the rezoned area may result in minimal impacts to special status species. On its own, the proposed project would result in a potentially significant impact to Swainson's hawk, burrowing owl,

loggerhead shrike, San Joaquin kit fox, and white-tailed kite. Other projects may have similar impacts on these species from vegetation removal and grading, which means the impact would be cumulatively significant. All of the proposed project's significant impacts would be reduced to less than significant with implementation of APM BIO-9 (mitigates potential for pets to kill San Joaquin kit foxes), APM BIO-11 (mitigates potential for San Joaquin kit fox to be entrapped in excavations), MM BIO-1 (worker training to reduce impacts to special status species), MM BIO-2 (mitigation of impacts of special status species through avoidance), MM BIO-3 (mitigation of impacts to special status species through monitoring), MM BIO-4 (mitigates impacts to nesting birds), MM BIO-5 (mitigates construction impacts to wildlife in general), MM BIO-6 (mitigates impacts to burrowing owl), and MM BIO-7 (mitigates impacts to special status raptors). The proposed project's contribution to the significant cumulative impact (significance criterion (a)) would not be cumulatively considerable after mitigation.

Operation and Maintenance

With the proposed expansion, Sanger Substation would continue to be operated remotely. Power line inspections would not change from those on the existing lines and new structures, including the expanded substation and transmission lines. The proposed project would not contribute to a cumulative biological resources impact during operation and maintenance.

Cultural Resources

Cultural and paleontological resources impacts are highly localized in that they impact resources in discrete areas; therefore, the cumulative cultural resources analysis uses the list approach. The geographic scope of cumulative impacts to cultural and paleontological resources would include all ground-disturbing projects within 100 feet of the proposed project that could impact known or undiscovered cultural resources. The geographic scope is limited because cultural resources are discrete and typically not very large, such that two projects must be very close to impact the same resource. None of the cumulative projects are located within 100 feet of the proposed project. Therefore, the proposed project would not contribute to a cumulative impact to cultural and paleontological resources (significance criteria (a), (b), (c), and (d)).

Geology and Soils

Geology and soils impacts are project-specific and highly localized; therefore, the cumulative geology and soils analysis uses the list approach. The geographic scope of cumulative impacts would include projects in the immediate vicinity of the proposed projects; for geology and soils impacts of different projects to accumulate, the projects must be close together so that impacts combine in the same location. All of the cumulative projects are located 1.5 miles or more from the proposed project. Therefore, the proposed project would not contribute to a cumulative impact to geology and soils (significance criteria (a), (b), (c), (d), and (e)).

Greenhouse Gases

The CEQA Guidelines address how a lead agency can assess cumulative impacts of projects that emit greenhouse gases (GHGs) (CEQA Guidelines Section 15064(h)(3)):

> A lead agency may determine that a project's incremental contribution to a cumulative effect is not cumulatively considerable if the project will comply with the requirements in a previously approved plan or mitigation program (including, but not limited to . . . regulations for the reduction of greenhouse gas emissions) that provides specific requirements that will avoid or substantially lessen the cumulative problem within the geographic area in which the project is located.

For this analysis, compliance with state-level policies is used to assess cumulative impacts, given that a substantial amount of GHG reduction programs and policies are undertaken or spearheaded at the state level. The cumulative scenario includes all GHG emission sources in California, which includes sources such as transportation, manufacturing, energy production, and agriculture.

Construction and Operation

Regional and global development patterns continue to rely on methods and practices that contribute large volumes of GHGs to the atmosphere, and impacts related to GHGs have widespread and potentially harmful consequences. The increase in GHGs in the atmosphere, caused in large part by human activity, is now considered one of the key causes of global climate change. Current scientific research indicates that potential effects of climate change include variations in temperature and precipitation, sea-level rise, impacts on biodiversity and habitat, impacts on agriculture and forestry, and human health and social impacts. As described in the state's Climate Change Scoping Plan of 2014 (CARB 2014), GHG sources in the state collectively result in emissions that are higher than the targets established by Assembly Bill 32, which indicates that GHG emissions in the state continue to contribute to a total significant state-wide cumulative impact.

The proposed project would contribute to a cumulative GHG impact because it would result in emission of GHGs. During construction, emissions would be generated by equipment/vehicle usage. During operation, emissions would be generated by equipment/vehicle usage and through sulfur hexafluoride (SF_6) leakage from circuit breakers.

The proposed project would comply with regulations related to reduction of GHG emissions from heavy-duty trucks during construction, including the Low Carbon Fuel Standard and, if applicable, "Phase 2" heavy-duty truck GHG standards and other standards and regulations adopted over time. Compliance with these standards is discussed in greater detail in Section 5.7, "Greenhouse Gases." The proposed project's contribution to the cumulative significant impact would therefore not be cumulatively considerable.

Hazards and Hazardous Materials

The cumulative hazards and hazardous materials analysis uses the list approach for hazardous materials impacts because the impacts are project-specific and highly localized. The geographic scope of cumulative impacts for hazardous materials and hazards, including wildfire, would be the area within 100 feet of the proposed project disturbance areas. The limited geographic scope is due to the fact that there is low risk for a hazardous material spill or release as a result of the proposed project. Furthermore, any release would not travel far due to the types of materials involved in construction. The greatest risk would be spillage of gasoline, diesel fuel, oil, or lubricants during construction. In the event of an accident, none of these substances are expected to be released in large quantities or to travel long distances. Furthermore, a wildfire would be limited geographically by roadways among the agricultural fields. None of the cumulative projects are located within 100 feet of the proposed project. Therefore, the proposed project would not contribute to a cumulative impact involving hazards and hazardous materials (significance criteria (a), (b), (c), (d), (e), (f), (g), (h)).

Hydrology and Water Quality

The cumulative hydrology and water quality analysis uses both the list approach and the projection approach, depending on the impact. Certain hydrology and water quality impacts are project-specific and highly localized, including water quality, drainage impacts, and runoff. Some impacts, however, are basin- or countywide, such as groundwater supply, making the projection approach most appropriate to evaluate cumulative impacts. The geographic scope of cumulative impacts for hydrology and water quality is dependent on the impact. Impacts related to groundwater supply and water quality are regional and thus examined at the county level. The other impacts would be more localized, and the geographic

scope is within 0.25 miles of the proposed project because this area encompasses the nearest drainages where local impacts to hydrology and water quality could combine. There are no projects located within 0.25 miles of the proposed project, so there would be no cumulative impacts related to drainage alteration (significance criteria (c) and (d), and (e)). Significance criteria (c), (d), and (e) as they relate to stormwater drainage are therefore not discussed further.

The proposed project would not result in impacts related to 100-year floods, seiches, tsunamis, or mudflows. The proposed project therefore would not contribute to a cumulative impact related to 100-year floods, seiches, tsunamis, or mudflows (significance criteria (g), (h), and (j)). The proposed project would not affect groundwater recharge and would therefore not contribute to a cumulative impact to groundwater recharge (significance criterion (b)). Construction of Sanger Substation would require 1 million gallons of water sourced from the City of Sanger, City of Fowler, and Sunnyside Farm (which owns the expansion parcel); operation would not use groundwater. Since construction and operation would represent a net reduction of groundwater use at the parcel, the proposed project would not contribute to cumulative adverse impacts to groundwater supply (significance criterion (b)). Significance criterion (b) is therefore not discussed further.

Construction

The proposed project and the projects identified in Table 5.18-2 would be required to adhere to applicable water quality regulations at the local, state, and federal levels. Likewise, all projects would be required to comply with applicable permitting requirements such as a Construction Activities Storm Water General Permit (Order 99-08-DWQ) for storm water discharges associated with construction activities. For any projects that would disturb more than 1 acre, a Stormwater Pollution Prevention Plan would also be required, which would mandate implementation of best management practices prior to construction, such as fiber rolls, silt fence, and mulch. Projects would also need to comply with applicable hazardous materials regulations to prevent spills. With compliance with existing regulations, cumulative impacts to water quality from sedimentation and hazardous materials spills (significance criteria (a), (e), and (f)) would not be significant.

Catastrophic failure of the Pine Flat Dam would cause inundation of a large and populated area of southern Fresno County, which would result in a significant impact. The proposed project would temporarily place workers within the inundation area, contributing to the significant impact (significance criterion (i)) in the event of dam failure. Given that the area would eventually drain, that water would be only 2 feet deep at the substation site, and that it is unlikely that dam failure will occur during the construction period, the proposed project's contribution to the significant impact would not be cumulatively considerable.

Operation and Maintenance

Operation of the expanded substation would be appreciably the same as current operations with regard to hazardous material use, and no additional ground disturbance would occur. No employees would be located on site. Operation of the proposed project would therefore not contribute to a cumulative impact to water quality from sedimentation and hazardous materials spills (significance criteria (a), (e), and (f). Operation also would not contribute to a cumulative impact related to dam failure (i).

Noise and Vibration

Noise and vibration impacts are highly localized; therefore, the cumulative noise and vibration analysis uses the list approach. The geographic scope for cumulative noise impacts is the area in which noise from the proposed project could combine with noise from cumulative projects to affect a sensitive receptor. For the loudest projects (i.e., those that could generate noise at 90 A-weighted decibels (dBA) at 50 feet from the noise source during Phase 5, which is the loudest phase of construction) and given attenuation of

noise over distance, the geographic scope is presumed to be about 0.6 miles, where noise would attenuate to under 54 dBA due to distance. It is likely that noise would be even further reduced due to intervening structures and vegetation. With this additional attenuation, noise at this distance would fade into ambient background noise (see Table 5.12-2). For vibration, the scope is even smaller due to the rapid attenuation of vibration over distance; the most intensive activities associated with proposed project construction would not be perceptible beyond about 36 feet (Amick and Gendreau 2000). Projects identified in Table 5.18-2 are more than 0.6 miles from Sanger Substation, such that noise and vibration from the proposed project would not combine with noise or vibration from another project to affect a sensitive noise receptor. Therefore, there would be no cumulative noise or vibration impact (significance criteria (a), (b), (c), and (d)). Furthermore, the proposed project would not be located within an airport land use plan or in the vicinity of a private airstrip and would therefore not contribute to related cumulative impacts (significance criteria (e) and (f)).

Population and Housing

The projection approach was used to analyze the proposed project's cumulative impact on population and housing. Because population growth occurs at a city, county, and regional level, a project list approach would not adequately represent the cumulative scenario. Therefore, a summary of projections approach was used to evaluate potential cumulative impacts. The cumulative scenario covers Fresno County, based on the assumption that projected population growth across the county would take into account the average growth of cities to which workers may relocate if they are working on the proposed project or any of the cumulative projects. The proposed project would not displace existing housing or people; it would not contribute to related cumulative impacts (significance criteria (b) and (c)); therefore, significance criteria (b) and (c) are not further discussed.

Construction

Caltrans forecasts that the population in Fresno County will grow approximately 1.2 percent from 2015 to 2020 (Caltrans 2016). Construction of 1.2 percent more housing could result in a significant cumulative environmental impact depending on the location and timing of construction. However, the proposed project's construction would not make a cumulatively considerable contribution to this impact because, while unlikely, even if 30 construction workers relocated to the project area, vacancy rates near 8.3 percent for the County of Fresno indicate existing housing could accommodate temporary population growth. Construction of the proposed project would not make a cumulatively considerable contribution to the cumulative impact (significance criterion (a)).

Operation and Maintenance

Operation and maintenance of the proposed project would have no impact on population and housing, given that the substation would be unstaffed. The proposed project therefore would not contribute to a cumulative population growth impact (significance criterion (a)).

Recreation

The projection approach was used to analyze the proposed project's cumulative impact on recreation facilities. Population growth affects use of recreational facilities. Because population growth occurs at a city, county, and regional level, a project list approach would not adequately represent the cumulative scenario. Therefore, a summary of projections approach was used to evaluate potential cumulative impacts. The proposed project would not include recreational facilities and would not contribute to cumulative impacts related to construction of recreational facilities (significance criterion (b)). Significance criterion (b) is therefore not further discussed.

Construction

Caltrans forecasts that the population in Fresno County will grow approximately 1.2 percent from 2015 to 2020 (Caltrans 2016), which would equate to about 12,000 people. The addition of 12,000 people to the county's population could result in significant degradation of recreational facilities. However, the proposed project's construction would not make a cumulatively considerable contribution to this impact because, while unlikely, even if 30 construction workers relocated to the project area, this addition to the population would be miniscule compared to projected growth in the County.

Operation and Maintenance

Operation and maintenance of the proposed project would have no impact on population, since the substation would be unstaffed, and thus no impact on degradation of recreational facilities, and would not contribute to a cumulative recreation impact (significance criterion (a)).

Transportation and Traffic

The impacts to traffic from the proposed project would be most concentrated near Sanger Substation; therefore, the list approach is most appropriate to analyze cumulative impacts to traffic and transportation.

The geographic scope of cumulative impacts for transportation and traffic includes projects that would result in impacts to roads that would be used for the proposed project's construction. Traffic associated with the Vita Pakt expansion project could use South McCall Avenue to access the site from State Route (SR) 180. Construction and buildout traffic of the Royal Woods Subdivision could use East Jensen Avenue and South McCall Avenue to access the site from the west. The agricultural market traffic would mainly come from adjacent SR-180 but could also come from South McCall Avenue.

The proposed project would not contribute to a change in air traffic patterns; therefore, there would be no cumulative air traffic impact (significance criterion (c)). The proposed project would not affect parking and therefore would not contribute to a cumulative parking impact (significance criterion (g)). Significance criteria (c) and (g) are therefore not further discussed.

Construction

Construction of Sanger Substation would result in a temporary impact on roadways, including those subject to the Fresno County Congestion Management Program (South McCall Avenue and East Jensen Avenue). The other proposed projects listed in Table 5.18-2 could result in traffic impacts on the same roadways, as construction periods could potentially overlap with the Sanger Substation construction period.

However, the agricultural center and the Vita Pakt project are in the planning stages, such that traffic volume analysis would be speculative at this stage. Likewise, the rezoning project does not specify what kinds of stores or other commercial uses would be located on the rezoned parcel, which means that traffic volume impacts analysis would be speculative as well. The Royal Woods subdivision is located approximately 1.2 miles east of Sanger Substation off of East Jensen Avenue, and construction of homes is expected to overlap with expansion of Sanger Substation. Roads that could be impacted by construction traffic from the proposed project and the Royal Woods subdivision include SR-180, South McCall Avenue, and East Jensen Avenue. Traffic associated with the subdivision project would include vehicle and truck trips by workers, material delivery, and heavy equipment delivery. If many homes are constructed at once, construction may generate a substantial amount of traffic on these roadways and combine with traffic from the proposed project.

Delays from lane closure due to line stringing across South McCall and East Jensen Avenues could result in a significant cumulative impact to circulation in combination with traffic associated with Royal Woods construction. The proposed project itself would generate a maximum of 200 passenger car equivalent trips per day. In combination with traffic from Royal Woods construction, it is unlikely that the level of service (LOS) would degrade below acceptable given the current adequate operating LOS of most affected roads (South McCall Avenue, East Jensen Avenue, and SR-180; there would not be a cumulative significant impact (significance criteria (a) and (b)) to LOS on these roads due to increases in traffic volume. For SR-168, where LOS is already level D, the addition of traffic from the proposed project and from Royal Woods would be incremental compared to the total annual daily traffic on SR-168 (73,803). The incremental addition of traffic from the proposed project would not result in a cumulative significant impact (significance criteria (a) and (b)) to LOS on SR-168. The proposed project may result in truck queuing on South McCall Avenue, which could result in delays to traffic traveling southbound on South McCall Avenue. The proposed project may also result in delay when lane closures are implemented for stringing over South McCall Avenue and East Jensen Avenue. Traffic associated with the Royal Woods Subdivision may contribute to the impact. This cumulative impact would be significant. The proposed project's contribution would be cumulatively considerable because, on its own, the proposed project would result in a significant traffic impact. PG&E would be required to implement MM TRAN-1, which would preclude project traffic from queuing on South McCall Avenue and reduce delays from lane closure. With mitigation, the project's contribution to a cumulative impact (significance criteria (a) and (b)) would not be cumulatively considerable.

Work in public roadways would likely not be required as part of any of the cumulative projects because they are contained within parcels and do not have components over roadways. Therefore, there would be no cumulative safety impact due to work in public roadways. The cumulative projects are also located far enough away from the proposed project that there would be no cumulative impact from slow truck egress. Heavy truck traffic from any of the cumulative projects could cause pavement damage similar to that associated with the proposed project. If damage occurs to the same roads, safety impacts could be significant. The proposed project on its own may result in a significant safety impact due to damage, which would be a cumulatively considerable contribution to the cumulative impact. PG&E would repair all damaged roadways per MM TRAN-1. After mitigation, the proposed project's contribution to the cumulative impact (significance criterion (d)) would not be cumulatively considerable.

While the proposed project may affect emergency access and public transit through lane closures, the cumulative projects likely would not require lane closure because they are home construction and commercial buildings that will be contained within parcels and do not have components over roadways. Thus, there would be no cumulative emergency access impact (significance criterion (e)) or public transit impact (significance criterion (f)).

Operation and Maintenance

Sanger Substation would continue to be operated remotely. Power line inspections would not change from those on the existing lines and new structures. Therefore, the proposed project's operation and maintenance would not contribute to a significant cumulative impact to traffic and transportation.

Utilities and Service Systems

The projection approach was used to analyze the cumulative impact to utilities because utilities are provided at the city and county levels. The geographic scope of cumulative impacts on utilities and service systems includes water district boundaries and landfill service areas that overlap with the proposed project area or that the project area would use. The City of Sanger may provide water proposed project construction. The landfill closest to the project area is the City of Clovis Landfill, located at 15679 Auberry Road in Fresno, California, approximately 15.3 miles northwest of the substation expansion area.

The second closest active landfill, the American Avenue Disposal Site, is located approximately 29.2 miles southwest of the substation expansion area.

Projects would presumptively comply with wastewater treatment requirements of the Central Valley Regional Water Quality Control Board, such that there would be no related cumulative significant impact (significance criterion (a)). The proposed project would not require or result in construction of new water or wastewater facilities or require the expansion of existing facilities, and thus it would not contribute to a significant impact (significance criterion (b)). The proposed project would have no impact related to noncompliance with federal, state, and local statutes and regulations related to solid waste disposal and therefore would not contribute to a significant impact (significance criterion (g)). Significance criteria (a), (b), and (g) are therefore not further discussed.

Construction

The Fresno County General Plan notes a significant impact from construction of new stormwater drainage facilities over time due to growth (Fresno County 2000). However, the proposed project's stormwater drainage facilities are self-contained and therefore do not contribute to those impacts. The proposed project would not contribute to a cumulative significant stormwater drainage impact (significance criterion (c)).

Construction of the proposed project would require approximately 1 million gallons of water. All water used would be trucked in from an outside source(s) in the project vicinity, which could include the City of Sanger, City of Fowler, or Sunnyside Farms (current owner of substation expansion area).

The City of Sanger is capable of producing 4.7 billion gallons of water per year from eight wells, and the current demand is 1.7 billion gallons of water per year (City of Sanger 2016a). The City of Fowler is capable of producing approximately 3.1 billion gallons of water per year and pumped 551,500 million gallons of water in 2015 (Weisser 2016). As described in Section 5.17, "Utilities and Service Systems," neither the City of Sanger nor the City of Fowler has a limit to the amount of water they may pump. Across the county, projected growth-related demand on water supply that would require additional facilities for water treatment has been identified as a significant cumulative impact (Fresno County 2000). The proposed project would utilize water and would therefore contribute to the significant cumulative impact. The proposed project would utilize water during the construction period, which would be temporary and for only 24 to 30 months. It would not cause the need for new entitlements during the temporary construction period, and then water use would cease. The proposed project therefore would not make a cumulatively considerable contribution to this significant impact (significance criterion (d)) if water from the City of Sanger or City of Fowler is used.

If Sunnyside Farms water is used, water use on the parcel would decrease during construction when compared to baseline. Given that the current demand is 5.9 million gallons per year on the expansion area for eggplant crops, and the proposed project's need is 1 million gallons over 24 to 30 months, there would be a decrease in water need at the substation expansion parcel if the Sunnyside Farms water supply is used. In this case, construction of the proposed project would not contribute to a cumulative water supply impact (significance criterion (d)).

The Fresno County General Plan notes a significant impact from construction of new wastewater facilities over time due to growth (Fresno County 2000). Wastewater would be generated during construction of Sanger Substation, but this impact would be temporary and would not be due to growth. Construction of the proposed project therefore would not contribute to a significant impact (significance criterion (e)).

Construction of Sanger Substation would generate solid waste from demolition and installation of new infrastructure installation of new steel tubular poles. The waste would be disposed of within the County.

The County General Plan EIR (Fresno County 2000) finds that there is adequate capacity at the county level in existing landfills to serve future needs under the General Plan, which includes projects such as the proposed project. The cumulative impact related to solid waste disposal (significance criterion (f)) would therefore be less than significant.

Operation and Maintenance

The expanded Sanger Substation would be operated remotely and would have no new permanent water, wastewater, or solid waste needs. No water would be used to operate or maintain the expanded substation; therefore, the proposed project would not contribute to a cumulative water use impact. Therefore, the proposed project's operation and maintenance would not contribute to a significant cumulative impact to utilities and service systems (significance criteria (c), (d), (e), (f)).

c. Does the project have environmental effects which will cause substantial adverse effects on human beings, either directly or indirectly?

The proposed project would not cause substantial adverse effects on human beings either directly or indirectly. The proposed project would result in temporary impacts to human health during construction, including changes to air quality, exposure to geologic hazards, and exposure to hazardous materials. As discussed in Section 5.3, "Air Quality," air quality effects would be less than significant. As discussed in Section 5.8, "Hazards and Hazardous Materials," hazards impacts would be less than significant with implementation of APMs and mitigation measures, including preparation and implementation of a Hazardous Materials Management Plan and implementation of an updated Spill Prevention Control and Countermeasure Plan. As discussed in Section 5.6, "Geology and Soils," seismic impacts on workers during construction would be less than significant, and the proposed project would not exacerbate existing seismic conditions. Operation and maintenance activities would be comparable to current activities and no additional impacts to human beings would occur.

6. Mitigation Monitoring and Reporting Plan

Pursuant to Public Resources Code Section 21081.6 and Section 15097 of the California Environmental Quality Act (CEQA) Guidelines, when an agency finds that mitigation measures have been required in, or incorporated into, a project to avoid or substantially lessen its significant environmental effects, the agency must adopt a program for monitoring or reporting on such mitigation measures. The purpose of this Mitigation Monitoring and Reporting Plan (MMRP) is to ensure effective implementation of the applicant proposed measures (APMs) and mitigation measures required by the California Public Utilities Commission (CPUC) that Pacific Gas and Electric Company (the applicant) has agreed to implement as part of the proposed Sanger Substation Expansion Project (proposed project). The MMRP, which is outlined in Table 6-1, includes:

- Each significant impact identified in the Initial Study/Mitigated Negative Declaration (IS/MND)
- APMs and mitigation measures that the applicant is required to implement as part of the proposed project to reduce significant impacts to less than significant
- Monitoring requirements
- Timing for implementation of APMs and mitigation measures
- Indicators for determining the effectiveness of implementation of APMs and mitigation measures
- Reporting requirements

This MMRP is a draft program. The CPUC will formalize this MMRP for inclusion in the Final IS/MND, prior to construction, to include specific protocols that will be followed prior to, during, and after construction by the CPUC's and the applicant's designated environmental monitors and project staff (as described in Section 6.3, "Final Mitigation Monitoring and Reporting Plan"). The Final MMRP will include, but not be limited to, protocols and timelines for the following topics:

- Agency Jurisdiction
- Roles/Responsibilities
- Communication
- Compliance Verification and Reporting
- Project Changes, including Minor Project Refinements
- Dispute Resolution

The CPUC's designated Project Manager and environmental monitor (or monitors) will monitor the proposed project to verify full compliance with each APM and mitigation measure. The designated Project Manager will verify all compliance documentation required by APMs and mitigation measures, and the designated environmental monitor will regularly visit the proposed project to verify APMs and mitigation measures are being implemented as described in the MMRP.

This page intentionally left blank.

Table 6-1 Draft Mitigation Monitoring and Reporting Plan

APMs and Mitigation Measures	Monitoring/Reporting Action	Effectiveness Criteria	Timing	Location	Responsible Agency
Aesthetics					
APM AES-2: New source of substantial light or glare avoidance. Security lighting at the substation will be directed on-site and will be hooded to reduce potential visibility from off-site locations.	CPUC verifies that PG&E installs new light sources which are to be directed on-site.	New sources of substantial light or glare will be directed on-site.	Post construction	Expanded substation	PG&E, CPUC
APM AES-3: Structures and equipment at the expanded substation will be a non-reflective finish and neutral gray color.	CPUC verifies that PG&E installs non-reflective and neutral gray structures and equipment.	The visual effects of glare are minimized by using non-reflective and neutral gray color structures and equipment.	Post construction	Expanded substation	PG&E, CPUC
MM AES-1 (supplements APM AES-2): Lighting utilized for night-time construction and for security during construction shall be shielded and oriented away from sensitive receptors.	CPUC verifies that PG&E light sources are shielded and are directed away from sensitive receptors.	All lighting for night-time construction or security is shielded and directed away from sensitive receptors.	During construction	Entire project area; not applicable to Fence Meadow Repeater Station.	PG&E, CPUC
MM AES-2 (supplements APM AES-3): All conductor used for the proposed project shall be non-specular.	CPUC verifies that PG&E installs non-specular conductors.	The visual effects of glare are minimized by using non-specular conductors.	During construction	All conductors	PG&E, CPUC
Agriculture and Forestry Resources					
APM AGR-1: Agriculture impacts avoidance and compensation. To avoid potential impacts on agriculture, PG&E will work with farmers to conduct its work between their harvest and planting periods where and whenever possible. In areas containing permanent crops that must be removed and replaced to gain access to pole sites for construction purposes, PG&E will provide compensation to farmers and/or landowners in accordance with PG&E's Property Damage Settlement Guidelines. Within 6 months of completion of project construction, PG&E shall also repair, replace or provide compensation for damage to fences, irrigation facilities and other such agricultural infrastructure. Access across active crop areas will be negotiated with the farmers and/ or owners in advance of any construction activities.	CPUC verifies that PG&E schedules work between harvest and planting periods where and whenever possible. CPUC verifies that PG&E compensates farmers and/or landowners when permanent crops must be removed or replaced in accordance with PG&E's Property Damage Settlement Guidelines. CPUC verifies that PG&E repairs, replaces, or compensates for any agricultural infrastructure damaged by construction activities.	Minimization of agriculture impacts. Any agricultural infrastructure damaged by construction activities is replaced or restored to its pre-construction condition.	Prior to construction – negotiate with farmers During construction – minimize disturbance to agricultural operations Within 6 months post construction – repair, replace, or compensate for damaged infrastructure	All areas where crops would be impacted, including access roads.	PG&E, CPUC
MM AGR-1: Farmland Construction Impact Mitigation (supplements APM AGR-1). PG&E shall implement the following measures for temporarily disturbed Farmland: • The applicant shall survey agricultural fields prior to construction and return all temporary disturbance areas to pre-construction conditions (i.e, meeting the definition of Prime Farmland, Unique Farmland, or Farmland of Statewide Importance, as shown on the maps prepared pursuant to the Farmland Mapping and Monitoring Program of the California Resources Agency) after the completion of construction, except that crops will not be replanted. • If topsoil is removed from an area to accommodate temporary construction activities, it shall be restored to preconstruction conditions within two months of the completion of construction, except that crops will not be replanted by PG&E.	CPUC verifies that PG&E completes pre-construction surveys of Farmland and restores topsoil.	Pre-construction conditions are recorded and topsoil is restored within two months of construction completion.	Prior to construction – conduct surveys Post construction – restoration	All areas where crops would be impacted, including access roads.	PG&E, CPUC

Table 6-1 Draft Mitigation Monitoring and Reporting Plan

APMs and Mitigation Measures	Monitoring/Reporting Action	Effectiveness Criteria	Timing	Location	Responsible Agency
Air Quality					
APM AIR-1: Fugitive dust emissions minimization. Pursuant to SJVAPCD Regulation VIII, a Dust Control Plan will be prepared and submitted to SJVAPCD for approval within the required timeframe prior to commencing construction activities. Based on the SJVAPCD Guidance for Assessing and Mitigating Air Quality Impacts (SJVAPCD 2015b), the following are examples of fugitive dust control measures that may be included in the Dust Control Plan to minimize dust emissions: • Apply water to unpaved surfaces and areas. • Use non-toxic chemical or organic dust suppressants on unpaved roads and traffic areas. • Limit or reduce vehicle speed on unpaved roads and traffic areas. • Maintain areas in a stabilized condition by restricting vehicle access. • Install wind barriers. • During high winds, cease outdoor activities that disturb the soil. • Keep bulk materials sufficiently wet when handling. • Store and handle loose materials that could create dust in a three-sided structure. • When storing bulk materials, apply water to the surface or cover the storage pile with a tarp. • Don't overload haul trucks. Overloaded trucks are likely to spill bulk materials. • Cover haul trucks with a tarp or other suitable cover. Or, wet the top of the load enough to limit visible dust emissions. • Clean the interior of cargo compartments on emptied haul trucks prior to leaving a site. • Prevent trackout by installing a trackout control device. • Clean up trackout at least once a day. If along a busy road or highway, clean up trackout immediately. • Monitor dust-generating activities and implement appropriate measures for maximum dust control.	CPUC verifies that PG&E meets SJVAPCD Regulation VIII requirements and follows the example dust control measures described in the SJVAPCD Guidance for Assessing and Mitigating Air Quality Impacts.	Fugitive dust has been controlled inside the project area and on unpaved access roads.	During construction	Applies to all unpaved construction areas, stockpiles of earthen materials, and all areas where earth-moving or excavations activities occur.	PG&E, CPUC, SJVAPCD
Biological Resources					
APM BIO-9: Pets and firearms. No pets or firearms are permitted within the project area.	CPUC verifies that PG&E prohibits pets and firearms within the project area.	No pets or firearms are permitted within the project area.	During construction	Entire project area	PG&E, CPUC
APM BIO-11: Backfilling. Prior to backfilling or placement of structures, all excavation sites (e.g., holes excavated for pole butts, trenches, etc.) will be inspected to ensure no small vertebrates have been entrapped. All excavations with a potential for entrapment of wildlife will be backfilled or fully covered at the end of the work day. Alternatively, holes or trenches will include one or more escape ramps constructed of earth fill or wooden planks no less than 10 inches wide and reaching to bottom of trench at the close of each working day.	CPUC verifies that PG&E implements activities to minimize wildlife entrapment at the close of each day.	Excavation sites are covered at the end of each day or escape ramps are in place. Prior to backfilling, all excavations will be inspected to ensure no wildlife have been entrapped.	During construction	All project areas containing excavation sites	PG&E, CPUC

Table 6-1 Draft Mitigation Monitoring and Reporting Plan

APMs and Mitigation Measures	Monitoring/Reporting Action	Effectiveness Criteria	Timing	Location	Responsible Agency
MM BIO-1: Biological Resources Worker Environmental Awareness Program. The applicant shall develop a Worker Environmental Awareness Program (WEAP). Prior to the start of construction, all construction crew members and contractors shall be required to attend the WEAP training presented by a CPUC-approved, qualified biologist. All construction crew members and contractors who attend the training shall sign a form indicating that they attended the training and understood the information. Follow-up training shall be conducted as needed; new workers shall attend WEAP training prior to beginning at the work site. A record of all trained personnel shall be kept on site, and a sticker indicating training completion shall be worn on all worker hard hats. The WEAP training shall include a review of the special status species and other sensitive resources (e.g., nesting birds) that could exist in the project area, the locations where sensitive biological resources do or may occur, the limits of the work area, applicable laws and regulations, penalties for non-compliance, and APMs and mitigation measures to be implemented for avoidance of these sensitive resources. Additionally, personnel shall be trained for situations where it is necessary to contact a qualified biologist (e.g., should any sensitive biological resources such as an active nest be found during construction). If sensitive resources are found, the qualified biologist shall provide guidelines for the personnel to avoid impacts on them. All WEAP participants shall receive a brochure that outlines all this information including contact information for the appropriate environmental personnel.	An environmental training program is prepared by PG&E, approved by CPUC, and implemented by PG&E; CPUC reviews the training logs and sign-in sheets provided by PG&E and verifies that stickers indicating training completion are worn on worker hard hats; CPUC verifies that PG&E provides training to all construction personnel.	All new construction personnel are adequately trained prior to the start of construction to avoid and/or minimize impacts on special status species during project construction.	Prior to construction – submit training program to CPUC for review and conduct training During construction – monitor continued training	Entire project area; not applicable to Fence Meadow Repeater Station.	PG&E, CPUC
MM BIO-2: Pre-activity surveys for sensitive species. A CPUC-approved qualified biologist shall conduct a pre-activity survey for all activities occurring near where sensitive resources may be found within 7 days prior to work commencing. If there is no work in an area for 7 days, it shall be considered a new work area if construction begins again. The biologist shall survey all suitable habitat for sensitive species within 100 feet of the activities (see MM BIO-4, MM BIO-6, or MM BIO-7 for additional nesting bird procedures). If any species listed by the state or federal endangered species acts or protected by other statutes, or their signs, are found, the CPUC and the appropriate wildlife agencies shall be notified within 48 hours to confirm appropriate avoidance measures. If it is determined that construction activity cannot avoid areas where sensitive biological resources are present, the qualified biologist shall coordinate with the CPUC, CDFW, and/or USFWS, as necessary. If a potential San Joaquin kit fox den is found then a minimum buffer of 50 feet shall be implemented. For a known den, the buffer shall be 100 feet and for a natal den the avoidance buffer shall be determined on a case-by-case basis in coordination with CDFW and USFWS. If dens cannot be avoided by these distances, a CPUC-qualified biologist shall determine occupation following the procedures outlined in USFWS Standardized Recommendations for Protection of the Endangered San Joaquin Kit Fox Prior to and During Ground Disturbance (USFWS 2011) and consult and coordinate with CDFW and USFWS.	Pre-activity survey report summarizing the results is prepared by PG&E and reviewed by CPUC and as appropriate by CDFW and/or USFWS before start of construction; CPUC verifies that PG&E implements any avoidance measures recommended by CPUC, CDFW, and/or USFWS.	All activity areas where sensitive resources may be found are surveyed prior to construction activities. Avoidance measures are implemented.	Prior to construction	Entire project area; not applicable to Fence Meadow Repeater Station.	PG&E, CPUC, CDFW, USFWS

Table 6-1 Draft Mitigation Monitoring and Reporting Plan

APMs and Mitigation Measures	Monitoring/Reporting Action	Effectiveness Criteria	Timing	Location	Responsible Agency
MM BIO-3: Biological Monitoring. A CPUC-approved qualified biological monitor shall develop an appropriate schedule of monitoring to ensure that disturbance is minimized to sensitive resources to the greatest extent possible during project activities. The schedule shall ensure that a CPUC-approved qualified biological monitor (1.) visits the project area regularly (at a minimum of every 7 days); (2.) is present to monitor all ground disturbing activities, such as grading and trenching; and (3.) is present to monitor any observed special status species (observed sign or individual) that may be disturbed by project activities. Biological monitors shall be familiar with San Joaquin kit fox and burrowing owl. Avian biologists present during nesting bird season may act as the biological monitor if qualified. The biological monitor shall be responsible for ensuring that impacts on special status species, their associated habitat, and/or sensitive resources are avoided to the fullest extent possible, and the monitor shall have full authority to halt construction if the monitor observes actual or potential disturbances to sensitive resources. At a minimum of once per 7 days, the monitor shall survey all project components near where construction activities may occur in the next 7 days, as well as the irrigation ditch area. Where appropriate, monitors shall flag the boundaries of areas where activities need to be restricted to protect special status species. If a special status species is present in the project area while construction activities are occurring, the restricted areas shall be monitored to ensure their protection during construction.	CPUC verifies that a CPUC-approved biological monitor is present during ground disturbing activities, has conducted periodic surveys, and has flagged sensitive areas.	A monitor is present at least once every 7 days. Periodic surveys and flagging of sensitive areas. Avoidance of impacts to fullest extent feasible.	During construction	Entire project area; not applicable to Fence Meadow Repeater Station.	PG&E, CPUC
MM BIO-4: Mitigation for nesting birds (Supersedes APM BIO-14). The applicant shall implement the measures below in all work areas where any construction-related activities are conducted during the nesting bird season (February 1 to September 15) for all species except Swainson's hawk and white-tailed kite (see MM BIO-7), and burrowing owl (see MM BIO-6). Nesting Bird Survey Requirements. If work is scheduled to occur during nesting bird season, then the following provisions shall be employed: • A CPUC-approved qualified avian biologist shall conduct surveys for nesting birds within 7 days prior to the start of any construction-related activities. Areas shall be re-surveyed every 7 days while construction activities are occurring. If there is no work in an area for 7 days, it shall be considered a new work area if construction resumes. In addition, a CPUC-approved qualified monitor shall conduct pre-construction clearance sweeps for nesting birds at all access, staging and, work areas where suitable habitat is present within approximately 24 hours of construction activities each day during the nesting season. • Surveys shall be conducted with the appropriate buffer, duration, level of effort, and timing based on level of construction disturbance, time of day, and environmental factors. Surveys shall be conducted within a 500 foot buffer of active work areas for raptors and a 250 foot buffer for non-raptors, at a minimum. • Surveys shall be conducted at a minimum between February 1 and September 15; however, the survey season may need to begin earlier or end later depending on species and weather conditions. • Survey results shall be provided to the CPUC each week. Avoid Impacts on Nesting Birds. • When a nest of any avian or raptor species is located within 500 feet of a construction site, a CPUC-approved qualified avian biologist shall determine whether the nest is active. A nest shall be defined as active once a bird begins	Nesting bird surveys and nest monitoring are performed by PG&E and results are reviewed by CPUC weekly and provided to CDFW and USFWS monthly. CPUC verifies that PG&E establishes proper buffers around nesting birds, follows the specified process for buffer reductions, and implements collision-reducing techniques for transmission line. CPUC approves buffer reduction requests from PG&E for special status species after review by USFWS and CDFW.	Nesting bird survey reports document that all requirements are fulfilled. Buffers are established and maintained. Nesting bird database includes all necessary information. Construction avoids project related "take" and is compliant with applicable laws protecting birds.	Prior to construction – conduct surveys During construction – conduct monitoring	Entire project area; not applicable to Fence Meadow Repeater Station.	PG&E, CPUC, CDFW, USFWS

Table 6-1 Draft Mitigation Monitoring and Reporting Plan

APMs and Mitigation Measures	Monitoring/Reporting Action	Effectiveness Criteria	Timing	Location	Responsible Agency
nest construction or when a raptor begins "nest decoration." An inactive nest is defined as a nest that has been abandoned by the adult bird or once fledglings are no longer dependent on the nest site or parental care. • If the nest is active, then the qualified biologist shall implement an exclusionary buffer to prevent construction activities from occurring within a specified distance from the active nest. For active raptor nests located more than 500 feet from the nearest work site, and non-raptor active nests located more than 250 feet from the nearest work site, no additional measures shall be implemented. A minimum standard buffer of 500 feet for an active raptor nest or 250 feet for an active non-raptor nest, as recommended by CDFW (Bahm pers. comm. 2016), shall be implemented when construction activities are occurring. Buffers shall not apply to construction-related traffic using existing roads that are not limited to project-specific use (i.e., county roads, highways, etc.). • If any active nest of a species listed by the state or federal endangered species acts or fully protected species (other than those specified MM BIO-7) is found, then the minimum standard buffer shall be implemented and the CPUC and the appropriate wildlife agencies shall be notified immediately (within 48 hours). • As appropriate, nest deterrent strategies may be used to prevent birds from nesting in construction equipment or staged materials. This includes covering equipment with tarps or covering small holes. Bird netting may not be used due to risk of entanglement. • If construction requires removal of a structure or tree that contains a known or historic nest, then removal of that structure must occur when the nest is determined to be inactive and, if feasible, outside of nesting season. • PG&E shall adhere to recommendations published by APLIC's Reducing Avian Collisions with Power Lines: The State of the Art in 2012 (APLIC 2012), as feasible. Monitoring and Reporting. Nest locations and exclusion buffers shall be mapped (using a geographic information system [GIS]) for all identified nests. The information shall be maintained in a database; shall be provided to the CPUC weekly and to USFWS and CDFW monthly; and shall include the following information: • Date, time, and length of observation period • Status (active or inactive) • Species • Nest location, including nest height • Behavioral observations • Site conditions, including construction activities • Nest exposure • Estimated date of nest establishment • Estimated fledge date • Number of eggs or hatchlings, if observed • Buffer size implemented Nests protected by a standard buffer shall be observed by a CPUC-approved qualified avian biologist at a frequency and length of time the avian biologist deems necessary to ensure activities are not causing disturbance to the nest (minimum of once a week during construction) until the biologist has determined that the nest is inactive or until after construction ends in the work area (whichever occurs first). If the biologist observes the birds becoming agitated or the incubating adult leaves the					

Table 6-1 Draft Mitigation Monitoring and Reporting Plan

APMs and Mitigation Measures	Monitoring/Reporting Action	Effectiveness Criteria	Timing	Location	Responsible Agency
nest as a result of construction activities, he or she shall have the authority to halt work and expand the buffer. No avian reporting shall be required for construction outside of the nesting season unless species are observed nesting outside of the normal season or special status bird species are observed in the project area. Buffer Reductions. The specified buffer sizes for nests may be reduced on a case-by-case basis based on compelling biological and ecological reasoning (e.g., the biology of the bird species, concealment of the nest by topography, land use type, vegetation, and the level of project activity), and if a CPUC-approved qualified avian biologist determines that a reduced buffer size would not result in the abandonment of the nest or failure. Buffer reduction requests shall be submitted to the independent avian biologist (a qualified avian biologist approved by the CPUC and who reports directly to the CPUC) to be reviewed and approved. The independent avian biologist shall respond to PG&E's request for a buffer reduction within 48 hours. Buffer reduction requests for special status species (other than those specified in MM BIO-6 and MM BIO-7) shall be submitted to the appropriate wildlife agencies and to the CPUC for approval. The request must include the following: • Species • Location • Pre-existing conditions present on site • Description of the work to be conducted within the reduced buffer, including equipment type and start date • Size and expected duration of proposed buffer reduction • Reason for buffer reduction • Name and contact information of the CPUC-approved qualified avian biologist who requested the buffer reduction and who shall conduct subsequent monitoring • Proposed frequency and methods of monitoring necessary for the nest given the type of bird and surrounding conditions as recommended by the CPUC-approved qualified avian biologist Nests shall be monitored until the avian biologist has determined that the nest is inactive; or construction ends within the standard buffer (whichever occurs first). The biologist shall halt construction and increase the reduced buffer size if it is determined that the nesting bird(s) are agitated or the incubating adult leaves the nest as a result of construction activities. Nesting in Active Work Areas. Non-special status species found building nests within the standard buffer zone after specific project activities begin and the activities are not expected to increase in duration, intensity, or distance from the nest, shall be assumed tolerant of that specific project activity and such nests shall be protected by the immediate implementation of the maximum buffer practicable (as determined by the CPUC-approved avian biologist). Notification, which includes the same data in the above reduction request, shall then be sent to the CPUC's independent avian biologist within 24 hours and the independent avian biologist shall have the authority to increase the buffer distance. These nests shall be monitored on a schedule determined by the qualified CPUC-approved avian biologist during construction activities until the avian biologist has determined that the nest is inactive; or construction ends within the standard buffer zone (whichever occurs first). If the CPUC-approved avian biologist determines that the nesting bird(s) are not tolerant of project activities, the buffer shall be expanded, and may be expanded beyond the					

Table 6-1 Draft Mitigation Monitoring and Reporting Plan

APMs and Mitigation Measures	Monitoring/Reporting Action	Effectiveness Criteria	Timing	Location	Responsible Agency
standard buffer distance.					
MM BIO-5: Wildlife Protection (Supersedes APMs BIO-4, -5, and -10). The applicant shall implement the following measures to ensure protection of all wildlife species. • Vehicle speed limits on existing unpaved access routes shall not exceed 15 miles per hour and shall not exceed 10 miles per hour on overland access roads. County speed limits shall be followed on existing paved roads. Construction personnel shall avoid collision with wildlife. • If night work is required, all lighting shall be shielded and point downward and away from any identified sensitive biological resources. • All trash and debris shall be secured in animal-proof containers before the end of each workday. Containers shall be emptied at least once per week and disposed of at an appropriate off-site location. • All construction personnel shall not harass any wildlife and shall allow wildlife to leave the work area on their own volition. • Disturbance limits shall be visibly flagged to ensure construction personnel minimize the construction footprint.	CPUC verifies that PG&E implements measures to protect wildlife.	Measures are implemented to avoid and/or minimize impacts on wildlife, including speed limits for project vehicles, animal proofing trash containers, and flagging of disturbance limits.	Prior to and during construction	Entire project area; not applicable to Fence Meadow Repeater Station.	PG&E, CPUC
MM BIO-6: Specific Requirements for Burrowing Owl (Supersedes APM BIO-13). A CPUC-approved qualified avian biologist familiar with burrowing owl biology and survey methods shall conduct a pre-construction survey for this species no more than 30 days prior to construction activities during the non-breeding season and no more than 14 days prior to construction during the breeding season (February 1 to August 31 with some variance by geographic location and climatic conditions; CDFW 2012). The biologist shall confirm whether the owls are occupying the site and whether they are actively nesting. If any burrowing owl or sign of an occupied burrow is observed, the CPUC shall be informed as soon as possible (and within 48 hours). Surveys shall include the irrigation ditch and any area with suitable habitat within 656 feet (200 meters) of the project activities. If access to areas with suitable habitat is restricted, the biologist shall visually survey with a spotting scope, binoculars, or other visual techniques. If an occupied burrow is identified, the CPUC-approved qualified biologist shall immediately implement a minimum 200 meter (656 foot) buffer. Then an appropriate burrow-specific buffer shall be recommended by the CPUC-approved qualified biologist based on the circumstances (e.g., owl tolerance and construction activity level) and as explained by the Staff Report on Burrowing Owl Mitigation (CDFW 2012 or more recent), which shall be approved by the CPUC and then implemented. In areas where owl presence or owl sign is not found, weekly surveys for burrowing owl and its sign shall be conducted for the remainder of the first breeding season and all following breeding seasons. Survey areas shall include work areas where construction-related activities are occurring, and surveys shall adhere to the following procedures: • A CPUC-approved qualified avian biologist shall conduct surveys for nesting birds within 7 days prior to the start of any construction-related activities. Areas shall be re-surveyed every 7 days while construction activities are occurring. If there is no work in an area for 7 days, it shall be considered a new work area if construction resumes. In addition, a CPUC-approved qualified monitor shall conduct pre-construction clearance sweeps for nesting birds at all work areas	CPUC verifies that PG&E conducts pre-construction surveys for burrowing owl according to the specification in this mitigation measure and implements avoidance measures recommended by CDFW in *Staff Report on Burrowing Owl*.	Impacts to burrowing owl are avoided by performing pre-construction surveys and avoiding burrowing owl burrows.	Prior to and during construction	Entire project area; not applicable to Fence Meadow Repeater Station.	PG&E, CPUC, CDFW

Table 6-1 Draft Mitigation Monitoring and Reporting Plan

APMs and Mitigation Measures	Monitoring/Reporting Action	Effectiveness Criteria	Timing	Location	Responsible Agency
where suitable habitat is present within approximately 24 hours of construction activities each day during the nesting season. • Surveys shall be conducted with the appropriate duration, level of effort, and timing based on level of construction disturbance, time of day, and environmental factors. Surveys shall be conducted in the irrigation ditch, and any area with suitable habitat within 656 feet (200 meters) of project activities, at a minimum. If access to areas with suitable habitat is restricted, the biologist shall visually survey with a spotting scope, binoculars, or other visual techniques. • Surveys shall be conducted at a minimum between February 1 and September 15; however, the survey season may need to begin earlier or end later depending on species and weather conditions. • Survey results shall be provided to the CPUC each week.					
MM BIO-7: Specific Requirements for Special Status Raptors (Supersedes APM BIO-12). A CPUC-approved qualified avian biologist shall conduct pre-construction surveys for Swainson's hawk and white-tailed kite in appropriate habitat within 0.5 miles of project construction activities prior to the start of construction during breeding season (i.e., the "first" breeding season). The avian biologist shall be familiar with the survey methods and biology of these species. Surveys for Swainson's hawk shall follow the protocols outlined in the Recommended Timing and Methodology for Swainson's Hawk Nesting Surveys in California's Central Valley (CDFW 2000a or more recent). If an active nest (i.e., when nest decoration begins) is identified within 0.5 miles of construction activities, then a CPUC-approved qualified avian biologist shall implement a 0.5 miles buffer around the nest. The CPUC and CDFW shall be informed of the nest as soon as possible (and within 48 hours). Requests to reduce standard buffers must be sent to the CPUC to be reviewed in coordination with CDFW. If no indication of Swainson's hawk or white-tailed hawk nesting (indications include vocalizations or observations of nesting activities, nests, perched adults, displaying adults, eggs, chicks) is found during protocol-level surveys, weekly surveys for nesting Swainson's hawk and white-tailed kite shall be conducted for the remainder of the breeding season in all work areas where any construction-related activities are occurring, according to the following procedures: • A CPUC-approved qualified avian biologist shall conduct surveys for nesting birds within 7 days prior to the start of any construction-related activities. Areas shall be re-surveyed every 7 days while construction activities are occurring. If there is no work in an area for 7 days, it shall be considered a new work area if construction resumes. In addition, a CPUC-approved qualified monitor shall conduct pre-construction clearance sweeps for nesting birds at all work areas where suitable habitat is present within approximately 24 hours of construction activities each day during the nesting season. • Surveys shall be conducted with the appropriate duration, level of effort, and timing based on level of construction disturbance, time of day, and environmental factors. Survey areas shall include work areas and a 500-foot buffer, at a minimum. • Surveys shall be conducted at a minimum between February 1 and September 15; however, the survey season may need to begin earlier or end later depending on species and weather conditions.	CPUC verifies that PG&E conducts pre-construction surveys for special status raptors according to the specifications in the mitigation measure and implements avoidance measure recommended by CDFW.	Impacts to special status raptors are avoided by performing pre-construction surveys and avoiding active nests.	Prior to and during construction	Within 0.5 miles of construction activities; not applicable to Fence Meadow Repeater Station.	PG&E, CPUC, CDFW

Table 6-1 Draft Mitigation Monitoring and Reporting Plan

APMs and Mitigation Measures	Monitoring/Reporting Action	Effectiveness Criteria	Timing	Location	Responsible Agency
• Survey results shall be provided to the CPUC each week. During subsequent breeding seasons following the first season, reconnaissance surveys for Swainson's hawk and white-tailed kite shall be performed in appropriate habitat and at the appropriate time within 0.5 miles of project construction activities in order to detect any new nesting activity. If no indication of nesting is found during reconnaissance surveys, weekly surveys for nesting Swainson's hawk and white-tailed kite shall be conducted for the remainder of the breeding season in all work areas where any construction-related activities are occurring (following procedures in the bullet points above).					
Cultural and Paleontological Resources					
APM CUL-4: Unanticipated discovery of human remains management. If human remains are discovered, work in the immediate vicinity will stop immediately and a PG&E Cultural Resources Specialist will be contacted. The location of the discovery will be secured to prevent further impacts and the location will be kept confidential. The Cultural Resources Specialist will evaluate the discovery and will contact the Fresno County Coroner upon verifying that the remains are human. If the coroner determines the remains are Native American, the Native American Heritage Commission will be contacted and the remains will be left in situ and protected until a decision is made on their final disposition.	CPUC verifies that PG&E implements protocols for unanticipated human remains discovery, including halting work in the event of an unanticipated discovery.	Work is halted if unanticipated human remains are discovered and the proper protocols implemented.	During construction	Entire project area; not applicable to Fence Meadow Repeater Station.	PG&E, CPUC
APM PAL-1: Worker's environmental resources training. All construction crew members must receive a paleontologically focused worker's environmental awareness training module prior to ground disturbance activities for the project. The module will be developed by the lead Paleontologist for the project and can be presented in person, through a safety tailboard, or in some other format, such as a brochure or videotape. The training module will cover the following topics: fossil/paleontological resource identification, discovery guidance, and the contact information of both the paleontological field monitor and the project paleontological resource specialist.	The training program is prepared by PG&E, approved by CPUC, and implemented by PG&E; CPUC verifies that new employees are trained by reviewing training records kept by PG&E.	All personnel receive the CPUC-approved training prior to starting work on the project. All personnel are aware of the APMs and mitigation measures and can effectively implement the measures.	Prior to construction – submit training program to CPUC for review and conduct training During construction – monitor continued training	Entire project area; not applicable to Fence Meadow Repeater Station.	PG&E, CPUC
MM CUL-1: Cultural Resources Monitoring and Treatment (supersedes APM CUL-3). A CPUC-approved archaeologist that meets the Secretary of Interior's Professional Qualifications Standards for archaeology shall implement the following procedures if an unanticipated cultural resource is discovered during construction. Work shall be halted and excluded from within 100 feet of the resource. Protective barriers shall be installed with signage identifying the area as an "environmentally sensitive area." The CPUC shall be notified of the find. Total avoidance of the resource is preferred, and no additional mitigation is necessary if it is avoided. The resource shall be recorded on California Department of Parks and Recreation 523 forms and filed at the South San Joaquin Valley Information Center. If the resource cannot be avoided, the CPUC-approved archaeologist shall determine in consultation with the CPUC if there is a potential for the resource to be historical (CEQA Guidelines section 15064.5(a)) or a unique archaeological resource (Public Resources Code 21083.2(g)). If the resource is not potentially a historical or unique archaeological resource, work can resume after the CPUC's concurrence. If the resource is potentially a historical or unique archaeological resource, the CPUC-approved archaeologist shall prepare an Evaluation Plan that details the procedures to be used to determine whether the resource is a historical or unique archaeological resource. The Evaluation Plan shall be submitted to the CPUC for review. The CPUC will approve or request changes to the Evaluation Plan within 7 days of submittal by PG&E. Once approved, the Evaluation Plan shall be implemented, and a report shall	The CRMTP is prepared by PG&E, approved by CPUC prior to the start of construction, and implemented by PG&E; CPUC verifies that PG&E implements monitoring as described in the plan, including halting work in the event of an unanticipated discovery.	Archeological monitoring is conducted according to the CRMTP. Measures identified in the CRMTP are implemented if a previously undiscovered cultural resource is uncovered during construction.	Prior to construction – prepare, submit, and obtain approval of CRMTP During construction – follow CRMTP in case of resource discovery	Entire project area; not applicable to Fence Meadow Repeater Station.	PG&E, CPUC

Table 6-1 Draft Mitigation Monitoring and Reporting Plan

APMs and Mitigation Measures	Monitoring/Reporting Action	Effectiveness Criteria	Timing	Location	Responsible Agency
be prepared that indicates whether the resource is a historical resource or unique archaeological resource. If the discovery is not historical or a unique archaeological resource and the CPUC concurs with that determination, work may proceed in the area of the discovery. If the discovery is historical or a unique archaeological resource, PG&E shall prepare a Data Recovery Plan that would reduce impacts to less than significant. The Data Recovery Plan shall be prepared in accordance with CEQA Guidelines section 15126.4(b)(3)(C) and PRC section 21083.2 and shall describe methods that will yield relevant information. The Data Recovery Plan shall be submitted to the CPUC for review and approval. The CPUC will approve or request changes to the Data Recovery Plan within 7 days of submittal by PG&E. Once approved, the applicant shall implement the plan. When the field work is completed, a Data Recovery Field Memo shall be prepared that briefly describes the data and materials recovery. The Data Recovery Field Memo shall be submitted to the CPUC for review and approval. The CPUC will approve or request changes to the Data Recovery Field Memo within 7 days of submittal by PG&E. Once the Data Recovery Field Memo has been approved, construction may proceed in the area of the discovery. A more detailed Data Recovery Report shall be prepared within 90 days of the Data Recovery Field Memo. The Data Recovery Report shall present thorough results of the data recovery efforts, conclusions drawn from the work, and where materials will be curated and shall also contain completed California Department of Parks and Recreation 523 forms. The Data Recovery Report shall be submitted to the CPUC for review and approval. Once approved, the Data Recovery Report and 523 forms shall be filed with the South San Joaquin Valley Information Center.					
MM CUL-2: Worker Education Program (supersedes APM CUL-1, supplements APM CUL-4). PG&E shall design and implement a Worker Education Program that shall be provided to all project personnel who may encounter and/or alter historical resources or unique archaeological resources, including construction supervisors and field personnel. No construction worker will be involved in field operations without having participated in the Worker Education Program. The Worker Education Program shall include, at a minimum: • A review of archaeology, history, prehistory and Native American cultures associated with historical resources in the project vicinity; • A review of the types of resources that could be uncovered in the area, including historical artifacts associated with the nonextant historical complex at the Sanger Substation site; • A review of applicable local, state, and federal ordinances, laws, and regulations pertaining to historic preservation and Native American resources; • A discussion of procedures to be followed in the event that unanticipated cultural resources or human remains are discovered during implementation of the project; • A discussion of disciplinary and other actions that could be taken against persons violating historic preservation laws and PG&E policies; and A statement by the construction company or applicable employer agreeing to abide by the Worker Education Program, PG&E policies and procedures, and other applicable laws and regulations.	The training program is prepared by PG&E, approved by CPUC, and implemented by PG&E; CPUC verifies that new personnel are trained by reviewing training records.	All personnel receive the CPUC-approved training prior to starting work on the project. All personnel are aware of the APMs and mitigation measures and can effectively implement the measures.	Prior to construction – submit training program to CPUC for review and conduct training During construction – monitor continued training	Entire project area; not applicable to Fence Meadow Repeater Station.	PG&E, CPUC

Table 6-1 Draft Mitigation Monitoring and Reporting Plan

APMs and Mitigation Measures	Monitoring/Reporting Action	Effectiveness Criteria	Timing	Location	Responsible Agency
MM CUL-3 (supersedes APM PAL-2): Unanticipated paleontological resource discovery protocol. If a previously unidentified paleontological resource is discovered during construction, PG&E shall immediately require that work be halted within 100 feet of the resource; measures be put in place to prevent further impacts to the resources, such as protective barriers and/or signs, and/or coverings; that PG&E's CPUC-approved Cultural Resources Specialist (CRS) and paleontological resource specialist be notified; and that the CRS notify the CPUC. PG&E's CPUC-approved paleontological resource specialist shall examine the find and determine whether it is unique under Part V of CEQA Guidelines Appendix G. The CPUC-approved paleontologist may develop significance criteria for the fossils likely to be yielded by the Riverbank Formation, subject to CPUC-approval (such criteria will be documented in the PRMMP discussed in MM CUL-4). In the absence of other agreed-upon criteria, a paleontological resource shall be considered unique if it meets the definition of a significant paleontological resource under the 2010 Society of Vertebrate Paleontology *Standard Procedures for the Assessment of Adverse Impacts to Paleontological Resources* definition: Significant paleontological resources are fossils and fossiliferous deposits, here defined as consisting of identifiable vertebrate fossils, large or small, uncommon invertebrate, plant, and trace fossils, and other data that provide taphonomic, taxonomic, phylogenetic, paleoecologic, stratigraphic, and/or biochronologic information. Paleontological resources are considered to be older than recorded human history and/or older than middle Holocene (i.e., older than about 5,000 radiocarbon years). The results of the evaluation will be submitted to the CPUC, and the CPUC must determine whether or not the resource is unique. If the resource is determined not to be unique, work may commence in the area. If the resource is significant and can be avoided and thus not impacted, PG&E shall document the resource in accordance with professional standards, continue to flag the area for avoidance during construction, and take no further action. Preservation in place, i.e., avoidance, is the preferred method of mitigation for impacts to unique paleontological resources. However, if the resource is unique and cannot feasibly be avoided, PG&E shall consult with the CPUC to determine appropriate mitigation measures.-Mitigation methods may include ensuring that fossils are recovered, prepared, identified, catalogued, and analyzed according to current professional standards under the direction of a qualified paleontologist. Methods of recovery, testing, and evaluation shall adhere to current professional standards for recovery, preparation, identification, analysis, and curation, such as the 2010 Society of Vertebrate Paleontology *Standard Procedures for the Assessment of Adverse Impacts to Paleontological Resources*. Work may commence after data recovery (if undertaken) and upon approval by the CPUC.	CPUC verifies that PG&E implements protocols for unanticipated paleontological resource discovery, including halting work in the event on an unanticipated discovery.	Work is halted if an unanticipated paleontological resource is discovered and the proper protocols implemented.	During construction	Entire project area; not applicable to Fence Meadow Repeater Station.	PG&E, CPUC
MM CUL-4 (supersedes APM PAL-3): Paleontological Resources Monitoring and Mitigation Plan. A qualified professional paleontologist shall prepare a Paleontological Resources Monitoring and Mitigation Plan (PRMMP) for the project before the onset of ground disturbing activities. The PRMMP shall be submitted to the CPUC for review and approval at least 30 days prior to the start of any excavation to 5 feet below ground surface. PG&E's CPUC-approved paleontological resource specialist shall direct implementation of the PRMMP. The PRMMP shall include full-time monitoring of excavations extending more than 5 feet deep and auguring/boring extending to more than 5 feet deep and more than 3	The PRMMP is prepared by PG&E, reviewed by CPUC, and implemented by PG&E; CPUC verifies that PG&E implements monitoring as described in the plan, including having a monitor present when applicable.	Paleontological monitoring is conducted according to the PRMMP, including having a monitor present when applicable.	Prior to construction – prepare, submit, and obtain approval of PRMMP During construction – monitoring is conducted as set forth in the PRMMP	Entire project area; not applicable to Fence Meadow Repeater Station.	PG&E, CPUC

Table 6-1 Draft Mitigation Monitoring and Reporting Plan

APMs and Mitigation Measures	Monitoring/Reporting Action	Effectiveness Criteria	Timing	Location	Responsible Agency
feet in diameter, or in lieu of full-time monitoring, the PRMMP shall include the following requirements: Initial Monitoring: 1. Prior to the start of construction, PG&E's CPUC-approved paleontological resource specialist shall identify a minimum number and array of excavation types (i.e. TSP foundation drilling, grading, retention pond) extending more than 5 feet deep and auguring/boring extending to more than 5 feet deep and more than 3 feet in diameter sufficient to obtain data to determine whether the project area is likely to yield significant paleontological resources. The placement of the locations requiring monitor will be developed by the paleontologist in consultation with PG&E's construction team, and will focus on volume of soil to be disturbed to produce a representative sample. The PRMMP shall identify the methods used (e.g., microscopic examination of matrix samples, visual examination of excavated material) to make the determination. 2. At all sites identified by PG&E's CPUC-approved paleontological resource specialist, a CPUC-approved paleontological field monitor shall monitor the excavation and auguring during the initial stages of construction (i.e., from the beginning of construction until a determination is made after initial monitoring as described in this item) to determine whether the project area is likely to yield significant paleontological resources. Subsequent Monitoring: The results of initial monitoring shall be described in a memo, to be submitted to CPUC for review and approval. CPUC will review and either request revisions or approve the memo within 2 business days of submittal by PG&E. PG&E shall not reduce or stop monitoring until CPUC approves the memo. Based on the results of initial monitoring, the following measures shall be required and described in the PRMMP: • If PG&E's CPUC-approved paleontological resource specialist determines that no part of the project area is likely to yield significant paleontological resources, further monitoring shall not be required. PG&E must still make available the paleontological resource specialist and paleontological field monitor (available to go to the work site as needed). Training provided pursuant to APM PAL-1 will enable work crews to identify likely fossils, and inform the appropriate parties if such deposits are identified. • If PG&E's CPUC-approved paleontological resource specialist discovers significant paleontological resources or determines the project area is likely to yield significant paleontological resources, then continued monitoring shall be required as deemed appropriate by the paleontological resource specialist, in consultation with the CPUC and PG&E's construction team, based on the nature, location, and geologic context of the fossil(s), as well as the potential for further disturbance. If a paleontological resource is discovered at any time during initial monitoring, continued monitoring, or unmonitored construction, PG&E shall notify the CPUC immediately and the paleontological resource specialist will inspect the matrix for fossils. If a paleontological resource is discovered, MM CUL-3 shall be implemented.					

Table 6-1 Draft Mitigation Monitoring and Reporting Plan

APMs and Mitigation Measures	Monitoring/Reporting Action	Effectiveness Criteria	Timing	Location	Responsible Agency
MM CUL-5: Undiscovered potential Tribal Cultural Resources. The following procedure shall be employed (after stopping work and following the procedure for determining eligibility in MM CUL-1) if a resource is encountered and determined by the project's qualified archaeologist to be eligible for the CRHR or a local register of historic resources and is associated with a California Native American Tribe(s) with a traditional and cultural affiliation with the geographic area of the proposed project: • The project's qualified archaeologist shall notify the CPUC for appropriate action. PG&E will assist the CPUC if needed to identify the lead contact person for the California Native American Tribe(s) potentially associated with the cultural resource and with a traditional and cultural affiliation with the geographic area of the proposed project. The CPUC will contact the lead contact person to set up a meeting with PG&E and the CPUC. • The project's qualified archaeologist shall participate with the CPUC in discussions with the California Native American Tribe(s) whether the resource is a "tribal cultural resource" as defined by PRC section 21084.3(b) and the tribe(s)' preferred method of mitigation, if the resource is determined to be a TCR. • If no agreement can be reached for mitigation after discussions with the California Native American Tribe(s) or it is determined that the tribe(s)' preferred mitigation is not feasible, PG&E will implement one of the example mitigation measures listed in PRC section 21080.3(b), or other feasible mitigation.	CPUC verifies that PG&E properly analyzes and processes all potential Tribal Cultural Resources.	All collected cultural remains are properly cataloged, analyzed, and curated with appropriate institutions.	During construction	Entire project area; not applicable to Fence Meadow Repeater Station.	PG&E, CPUC
Geology and Soils					
APM GEO-2/APM WQ-1: Development and implementation of a Stormwater Pollution Prevention Plan (SWPPP). Because the project involves more than an acre of soil disturbance, a SWPPP will be prepared for the project as required by the state National Pollutant Discharge Elimination System (NPDES) General Permit for Discharges of Stormwater Associated with Construction Activity. This plan will be prepared in accordance with the Water Board guidelines and other applicable erosion and sediment control Best Management Practices (BMPs). Implementation of the plan will help stabilize disturbed areas and will reduce erosion and sedimentation. The SWPPP will designate BMPs that will be followed during and after construction of the project. Examples of erosion-minimizing measures that may be identified in the SWPPP include: • Using drainage control structures (e.g., straw wattles or silt fencing) to direct surface runoff away from disturbed areas. • Strictly controlling vehicular traffic. • Implementing a dust-control program during construction. • Restricting access to sensitive areas. • Using vehicle mats in wet areas. • Revegetating disturbed areas, where applicable, following construction. In areas where soils are to be temporarily stockpiled, soils will be placed in a controlled area and will be managed with similar erosion control techniques. Where construction activities occur near a surface waterbody or drainage channel and drainage from these areas flows towards a waterbody or wetland, stockpiles will be placed at least 100 feet from the waterbody or will be properly contained (such as berming or covering to minimize risk of sediment transport to the drainage). Mulching or other suitable stabilization measures will be used to protect exposed areas during and after construction activities. Erosion-control measures will be installed, as	PG&E prepares and submits SWPPP to RWQCB; CPUC verifies that PG&E submits SWPPP and implements proper BMPs.	SWPPP is prepared and implemented.	Prior to construction – obtain NPDES General Permit and prepare SWPPP During construction – implement BMPs	Entire project area	PG&E, CPUC, RWQCB

Table 6-1 Draft Mitigation Monitoring and Reporting Plan

APMs and Mitigation Measures	Monitoring/Reporting Action	Effectiveness Criteria	Timing	Location	Responsible Agency
necessary, before any clearing during the wet season and before the onset of winter rains. Temporary measures, such as silt fences or wattles intended to minimize erosion from temporarily disturbed areas, will remain in place until disturbed areas have stabilized. The SWPPP will be designed specifically for the hydrologic setting of the project.					
Greenhouse Gases					
APM GHG-1: Minimize GHG emissions. • Minimize unnecessary construction vehicle idling time. The ability to limit construction vehicle idling time will depend on the sequence of construction activities and when and where vehicles are needed or staged. Certain vehicles, such as large diesel-powered vehicles, have extended warm-up times following start-up that limit their availability for use following start-up. Where such diesel-powered vehicles are required for repetitive construction tasks, these vehicles may require more idling time. The project will apply a "common sense" approach to vehicle use, so that idling is reduced as far as possible below the maximum of 5 consecutive minutes allowed by California law; if a vehicle is not required for use immediately or continuously for construction activities, its engine will be shut off. Construction foremen will include briefings to crews on vehicle use as part of pre-construction conferences. Those briefings will include discussion of a "common sense" approach to vehicle use. • Maintain construction equipment in proper working conditions in accordance with PG&E standards. • Minimize construction equipment exhaust by using low-emission or electric construction equipment where feasible. Portable diesel fueled construction equipment with engines 50 hp or larger and manufactured in 2000 or later will be registered under the CARB Statewide Portable Equipment Registration Program. • Minimize welding and cutting by using compression of mechanical applications where practical and within standards. • Encourage use of natural gas powered vehicles for passenger cars and light-duty trucks where feasible and available. • Encourage the recycling of construction waste where feasible.	CPUC-designated environmental monitor verifies that PG&E minimizes vehicle idling time, construction equipment is kept in proper working condition, and low-emission or electrical equipment is used where feasible. CPUC verifies that PG&E trains workers on vehicle use.	Greenhouse gas emission minimization strategies are being implemented.	Prior to construction – verify training of workers During construction	Entire project area	PG&E, CPUC
APM GHG-2: Minimize sulfur hexafluoride (SF_6) emissions. To avoid and minimize fugitive (leakage) SF_6 emissions, PG&E will incorporate the following measures: • Incorporate Sanger Substation into PG&E's system-wide SF_6 emission reduction program. CARB has adopted the Regulation for Reducing Sulfur Hexafluoride Emissions from Gas Insulated Switchgear sections 95350 to 95359, title 17, California Code of Regulations, which requires that company-wide SF_6 emission rate not exceed 1 percent by 2020. Since 1998, PG&E has implemented a programmatic plan to inventory, track, and recycle SF_6 inputs, and inventory and monitor system-wide SF_6 leakage rates to facilitate timely replacement of leaking breakers. PG&E has improved its leak detection procedures and increased awareness of SF_6 issues within the company. X-ray technology is now used to inspect internal circuit breaker components to eliminate dismantling of breakers, reducing SF_6 handling and accidental releases. As an active member of USEPA SF_6 Emission Reduction Partnership for Electrical Power Systems, PG&E has focused on reducing SF_6 emissions from its transmission and distribution operations and has reduced the SF_6 leak	PG&E provides documentation to CPUC to show implementation of SF_6 emission reduction program.	SF_6 mitigation strategies, including record keeping and maximum leakage rates, are implemented.	During operation and maintenance	Expanded substation	PG&E, CPUC

Table 6-1 Draft Mitigation Monitoring and Reporting Plan

APMs and Mitigation Measures	Monitoring/Reporting Action	Effectiveness Criteria	Timing	Location	Responsible Agency
rate by 89 percent and absolute SF_6 emissions by 83 percent. • Require that the breakers at Sanger Substation have a manufacturer's guaranteed maximum leakage rate of 0.5 percent per year or less for SF_6. • Maintain substation breakers in accordance with PG&E's maintenance standards. • Comply with California Air Resources Board Early Action Measures as these policies become effective.					
Hazards and Hazardous Materials					
APM HAZ-1: Spill Prevention, Control, and Countermeasures (SPCC). In the event of an accidental spill, the substation is equipped with a retention basin that meets SPCC Guidelines (40 CFR 112). The retention basin will be sufficiently sized to accommodate the accidental spill of all mineral oil from the largest transformer located at the substation. The substation will also be equipped with lead-acid batteries to provide backup power for monitoring, alarm, protective relaying, instrumentation and control, and emergency lighting during power outages. Containment will be constructed around and under the battery racks, and the SPCC will address containment from a battery leak. A site-specific SPCC Plan will be prepared prior to the initiation of construction.	The site-specific SPCC Plan will be prepared by PG&E, approved by CPUC, and implemented by PG&E. CPUC will verify that PG&E implements the SPCC, including inspection of required measures by CPUC-designated environmental monitor.	SPCC procedures and requirements are implemented.	Prior to construction – prepare SPCC Plan and submit to CPUC for review and approval During operation – implement SPCC Plan	Entire project area; not applicable to Fence Meadow Repeater Station.	PG&E, CPUC
APM HAZ-3: Shock hazard. All authorized personnel working on site, during either construction or maintenance and operation, will be trained according to PG&E standards. To minimize potential exposure of the public to electric shock hazards, an 8-foot-tall chain link fence topped with 1 foot of barbed wire will extend around the perimeter of the expanded substation for a total of approximately 9 feet, thus restricting site access. Warning signs will be posted to alert persons of potential electrical hazards. All electric power lines will be designed in accordance with CPUC General Order 95 Guidelines for safe ground clearances established to protect the public from electric shock.	CPUC verifies that PG&E installs fences and signs, and that PG&E designs electrical power lines in accordance with CPUC General Order 95 Guidelines.	All personnel receive training prior to starting work on the project. Fence and signs installed and CPUC General Order 95 Guidelines implemented. Security fence installed.	Prior to construction – verify training of workers During operation and maintenance – verify implementation of design elements	Substation and all power lines	PG&E, CPUC
MM HAZ-1: Hazardous Materials Management Plan (supersedes APM HAZ-2 and APM HAZ-4). Prior to construction, the applicant shall prepare a Hazardous Materials Management Plan, which shall be implemented during construction to prevent the release of hazardous materials and hazardous waste. The plan shall include the following requirements and procedures: 1. Training requirements for construction workers in appropriate work practices, including spill prevention and response measures. Additional training requirements for those performing excavation activities shall be required and shall include training on types of contamination and contaminants (e.g., petroleum hydrocarbons, asbestos, and hazardous materials [as defined by the California HSC]) and identifying potentially hazardous contamination (e.g., stained or discolored soil and odor). 2. Contain all hazardous materials at work sites and properly dispose of all such materials. a. Hazardous materials shall be stored on pallets within fenced and secured areas and protected from exposure to weather and further contamination. b. Fuels and lubricants shall be stored only at designated staging areas. 3. Maintain hazardous material spill kits for small spills at all active work sites and staging areas. Thoroughly clean up all spills as soon as they occur. 4. Store sorbent and barrier materials at all construction staging areas, including staging areas used during activities for decommissioning. Sorbent and barrier materials will be used to contain runoff from contaminated areas and from accidental releases of oil or other potentially hazardous materials.	HMMP is prepared by PG&E and submitted to CPUC for review and approval; CPUC verifies that PG&E trains workers by reviewing training logs. CPUC-designated environmental verifies that PG&E implements HMMP by inspecting construction sites for presence of spill kits and other required materials, inspection of construction vehicles for leaks, and proper handling of any hazardous materials.	Minimize exposure to hazardous materials or hazardous waste.	Prior to construction – prepare, submit, and obtain approval of HMMP and conduct training During construction – implement HMMP	Entire project area; not applicable to Fence Meadow Repeater Station.	PG&E, CPUC

Table 6-1 Draft Mitigation Monitoring and Reporting Plan

APMs and Mitigation Measures	Monitoring/Reporting Action	Effectiveness Criteria	Timing	Location	Responsible Agency
5. Perform all routine equipment maintenance at a shop or at the staging area and recover and dispose of wastes in an appropriate manner. 6. Monitor and remove vehicles used for construction-related activities with chronic or continuous leaks from use and complete repairs before returning them to operation. 7. Store shovels and drums at the staging areas. If small quantities of soil become contaminated, use shovels to collect the soil and store in drums before proper offsite disposal. Large quantities of contaminated soil may be collected using heavy equipment and stored in drums or other suitable containers prior to disposal. Should contamination occur adjacent to staging areas because of runoff, shovels and/or heavy equipment shall be used to collect the contaminated material. Only trained construction workers shall handle hazardous, and potentially hazardous, materials. 8. Transporting, shipping, and disposal procedures for hazardous waste. 9. Procedures for notifying applicant and agency personnel in the event of the discovery of contaminated soil and/or groundwater. Contact information for federal, regional, and local agencies, the applicant's environmental coordinator(s) responsible for the cleanup of contaminated soil or groundwater, and licensed disposal facilities and haulers. This plan will be submitted to the CPUC for review and approval 30 days prior to the start of construction of the proposed project.					
MM HAZ-2: Fire Control Measures. PG&E shall implement the following measures prior to and during work at the Fence Meadow Repeater Station: 1. As part of the Worker Training Program, workers will be trained in fire prevention and response practices to be implemented to minimize the risk of fire, and in the event of fire, trained to provide immediate response. At minimum, construction personnel shall be trained in fire reporting and incipient-stage fire prevention, control, and extinguishing (i.e., the fire can be controlled or extinguished by portable fire extinguishers, small hose systems, or portable water supplies without the need for protective clothing or breathing apparatus.) 2. Prohibit smoking at the worksites other than in designated areas chosen that are free of ignitable material. Require disposal of cigarette butts in a way that will not ignite vegetation or other materials. 3. Ensuring an appropriate fire extinguisher is present before initiating and during each hot-work activity (e/g/, welding, brazing, soldering, grinding, and arc cutting). 4. Preventing vehicles with hot exhaust manifolds from idling on roads with combustible vegetation under the vehicles. 5. Do not park vehicles in areas with vegetation prone to ignition. 6. Equip all vehicles with a fire extinguisher.	CPUC-designated environmental monitor verifies that PG&E prohibits smoking outside an appropriate designated area and provides required fire extinguishers. CPUC verifies that PG&E trains workers on fire prevention and response by reviewing training logs.	All personnel receive the CPUC-approved training prior to starting work on the project. All personnel can effectively implement the measures. Smoking is prohibited outside of designated area, required fire extinguishers are available, parking and idling does not occur near combustible vegetation as required.	Prior to construction – verify training of workers During construction – implement measures	Fence Meadow Repeater Station	PG&E, CPUC
Hydrology and Water Quality					
APM GEO-2/APM WQ-1: Development and implementation of a Stormwater Pollution Prevention Plan (SWPPP). See Geology and Soils.	See Geology and Soils.	See Geology and Soils.	See Geology and Soils.	See Geology and Soils.	See Geology and Soils.

Table 6-1 Draft Mitigation Monitoring and Reporting Plan

APMs and Mitigation Measures	Monitoring/Reporting Action	Effectiveness Criteria	Timing	Location	Responsible Agency
Noise					
APM NOI-2: Construction equipment noise reduction devices and low noise equipment. PG&E shall include noise control requirements in specifications provided to construction contractors. Such contract specifications would include, but not be limited to, performing all work in a manner that minimizes noise; use of equipment with effective mufflers; use of "quiet" equipment (i.e., equipment that incorporates noise control elements into the design—compressors have "quiet" models) whenever possible; using equipment that is specifically designed for low noise emissions and equipment powered by electric or natural gas as opposed to diesel or gasoline; and undertaking the most noisy activities during the daytime to minimize disturbance to surrounding residents.	CPUC verifies that PG&E uses noise reduction devices and low noise equipment.	Construction equipment noise is reduced by implementing noise reduction devices or using low noise equipment.	During construction.	Entire project area.	PG&E, CPUC
APM NOI-3: Placement of stationary construction equipment. Stationary equipment used during construction will be located at a minimum distance of 200 feet from sensitive noise receptors.	CPUC verifies that stationary equipment used during construction is located 200 feet from sensitive noise receptors.	Stationary equipment is located more than 200 feet from sensitive noise receptors.	During construction.	Entire project area.	PG&E, CPUC
APM NOI-4: Minimization of unnecessary engine idling. Unnecessary engine idling will be limited. (See APM GHG-1.)	CPUC verifies engine idling is limited.	Engine idling is limited.	During construction.	Entire project area.	PG&E, CPUC
APM NOI-6: Noise disruption minimization through residential notification. Residents in areas of heavy construction noise will be notified prior to commencing construction activities. Notification will include written notice and the posting of signs in appropriate locations with a contact number that residents can call with questions and concerns.	CPUC verifies residents in area will be notified prior to heavy construction noise activities begin.	Residents are notified prior to heavy construction noise commencing.	During construction.	Entire project area.	PG&E, CPUC
Traffic and Transportation					
MM TRAN-1: Traffic Management Plan (supersedes APM TRAN-1). A Traffic Management Plan shall be prepared upon determination of the final construction schedule and precise locations and durations of lane closures and other project details. Measures to be included in the plan that would allow for: • Safe vehicle passage shall adhere to the California Manual on Uniform Traffic Control Devices. • Avoidance of truck queuing on South McCall Avenue of trucks waiting to enter the substation construction site. Potential measures include: • Flaggers and/or signage to halt traffic and direct traffic at lane closures and to allow traffic to pass when construction is halted. • Scheduling lane closures at off-peak times. • Notification of emergency services providers of the timing, location, and duration of lane closures. • Requirement that emergency vehicle access is maintained at all times. • Scheduling construction deliveries and employee arrival to be spread out throughout the day. • Implementing traffic control within the substation site to move vehicles to allow arriving vehicles to enter the site. The Traffic Management Plan shall also include the following measures: • Limit Vehicle Speeds: Vehicle speeds shall be limited to 15 miles per hour on unpaved roadways used to access the site during construction. PG&E shall notify owners of property on which internal access roads are located at least one week in advance that the internal access road will be used for construction	CPUC verifies that PG&E prepares and implements a Traffic Management Plan. CPUC verifies that PG&E implements measures to avoid queueing of trucks and vehicles on South McCall Avenue. PG&E ensures that vehicle speeds do not go above 15 mph on unpaved roadways used to access the site. CPUC verifies that PG&E posts signage along South McCall Avenue and East Jensen Avenue when there is the possibility of slow trucks exiting the site. Signage shall adhere to the California Manual on Uniform Traffic Control Devices. CPUC verifies that PG&E repairs any roads damaged by project vehicle traffic to pre-project conditions; and verifies that PG&E documents roadway conditions before and after construction along East Jensen	Avoid queuing on South McCall Avenue. Vehicle speeds remain below or at 15 mph. Allow for safe vehicle passage during lane closures. Repair all damaged roads pre-project pavement conditions.	Prior to construction – prepare a Traffic Management Plan and document pre-project road conditions. During construction – implement Traffic Management Plan Post construction – document road conditions and repair damaged roadways	Substation site and South McCall Avenue	PG&E, CPUC

Table 6-1 Draft Mitigation Monitoring and Reporting Plan

APMs and Mitigation Measures	Monitoring/Reporting Action	Effectiveness Criteria	Timing	Location	Responsible Agency
traffic. • Slow Truck Warning: During truck delivery and exit hours, PG&E shall post signage at appropriate locations (e.g., along South McCall and East Jensen Avenues) warning drivers when there is a possibility for slow trucks to exit the substation site onto South McCall Avenue. Signage shall adhere to the California Manual on Uniform Traffic Control Devices. • Road Damage Repair: PG&E shall repair to pre-project conditions any roads damaged by project vehicle traffic. PG&E shall document roadway conditions with photographs prior to project activities along East Jensen Avenue and South McCall Avenue adjacent to the project area and extending 0.25 miles from the project area. PG&E shall also take photographs after the project is completed and after any repairs that document restoration of pre-project pavement conditions. • Emergency Service Provider Notification: PG&E shall notify the provider of the location, date, time, and duration of the lane closure. PG&E shall make provisions to maintain emergency vehicle access at all times in coordination with local emergency service providers, such as allowing for bypass of slow vehicle traffic during lane closures. To the extent that compliance with applicable permit requirements, e.g., obtaining the required encroachment permit from Fresno County, would reduce identified significant traffic impact(s) consistent with the performance standards set forth in MM TRAN-1, PG&E may submit such permit(s) in lieu of addressing that impact, subject to review and approval by CPUC prior to the start of construction.	Avenue and South McCall Avenue.				

Key:

APM	applicant proposed measure
BMP	best management practices
CARB	California Air Resources Board
CDFW	California Department of Fish and Wildlife
CPUC	California Public Utilities Commission
CFR	Code of Federal Regulations
CRMTP	Cultural Resources Monitoring and Treatment Plan
dBA	A-weighted decibels
HMMP	Hazardous Materials Management Plan
hp	horsepower
IS/MNP	Initial Study/Mitigated Negative Declaration
MM	mitigation measure
mph	miles per hour
NCP	National Oil and Hazardous Substances Pollution Contingency Plan
NPDES	National Pollutant Discharge Elimination System
PG&E	Pacific Gas and Electric Company
PRMMP	Paleontological Resources Monitoring and Mitigation Plan
RWQCB	Regional Water Quality Control Board
SF_6	sulfur hexafluoride
SJVAPCD	San Joaquin Valley Air Pollution Control District
SPCC	Spill Prevention, Control, and Countermeasures
SWPPP	Stormwater Pollution Prevention Plan
USEPA	U.S. Environmental Protection Agency
USFWS	U.S. Fish and Wildlife Service

The CPUC-designated Project Manager and environmental monitor will keep a record of any incidents of non-compliance with mitigation measures, APMs, or other conditions of project approval, which will be supplied to the applicant and the CPUC. In all instances of non-compliance, the CPUC's designated Project Manager or environmental monitor may discuss necessary compliance corrections with the construction supervisor and/or the applicant's Project Manager. Continued non-compliance or non-compliance that puts environmental resources at risk will be reported immediately to the CPUC Project Manager. The CPUC (-designated environmental monitor, designated Project Manager, or the CPUC Project Manager) may decide to halt work due to non-compliance.

6.1 Minor Project Refinements

This section describes the CPUC's process for staff approval of Minor Project Refinements (MPRs) that may be necessary due to changes needed after the applicant's final engineering of elements of the proposed project. During the course of construction, circumstances may arise that require minor deviations from the project as approved. The CPUC, along with the IS/MND environmental monitors, would evaluate any proposed deviations from the approved project to ensure they are consistent with CEQA requirements. Depending on its nature, a requested deviation would be processed as a Minor Project Change (MPC) or be the subject of a Petition for Modification (PFM) submitted by the applicant to the CPUC.

MPCs would be strictly limited to minor project changes that do not trigger additional permit requirements, do not increase the severity of a significant impact or create a new significant impact, and are within the geographic scope of the IS/MND.

If a project change would create or have the potential to create a new significant impact, increase the severity of a significant impact, or occur outside the geographic area evaluated in the IS/MND, PG&E would be required to submit a PFM. The CPUC would evaluate the PFM under CEQA, as appropriate, to determine what form of supplemental environmental review would be required.

6.2 Dispute Resolution

The following procedure will be observed for dispute resolution:

- **Step 1.** Disputes and complaints (including those of the public) should be directed first to the CPUC-designated Project Manager for resolution. The CPUC Project Manager will attempt to resolve the dispute.
- **Step 2.** Should this informal process fail, the CPUC Project Manager may initiate enforcement or compliance action to address deviations from the proposed project or adopted MMRP.
- **Step 3.** If a dispute or complaint regarding the implementation or evaluation of the MMRP cannot be resolved informally or through enforcement or compliance action by the CPUC, any affected participant in the dispute or complaint may file a written "notice of dispute" with the CPUC Executive Director or his/her designee. This notice should be filed in order to resolve the dispute in a timely manner, with copies concurrently served on other affected participants. Within 10 days of receipt, the CPUC Executive Director or designee(s) shall meet and confer with the filer and other affected participants for the purposes of resolving the dispute. The CPUC Executive Director shall issue an Executive Resolution describing his/her decision, and serve it on the filer and other affected participants.

- **Step 4.** If one or more of the affected parties is not satisfied with the decision as described in the resolution, such party(ies) may appeal it to the CPUC via a procedure to be specified by the CPUC.

Parties may also seek review by the CPUC through existing procedures specified in the CPUC Rules of Practice and Procedure for formal and expedited dispute resolution, although a good faith effort should first be made to use the foregoing procedure.

6.3 Final Mitigation Monitoring and Reporting Plan

A Final MMRP will be prepared for the Final IS/MND that incorporates any changes to the proposed project or mitigation measures that are made as a result of public review of the Draft IS/MND and further consideration of the proposed projects by the CPUC.